swiss bed concept

MONTAGEANLEITUNG
NOTICE DE MONTAGE
ASSEMBLY INSTRUCTION
ISTRUZIONE DI MONTAGGIO

HASENA
the dream factory

Prato

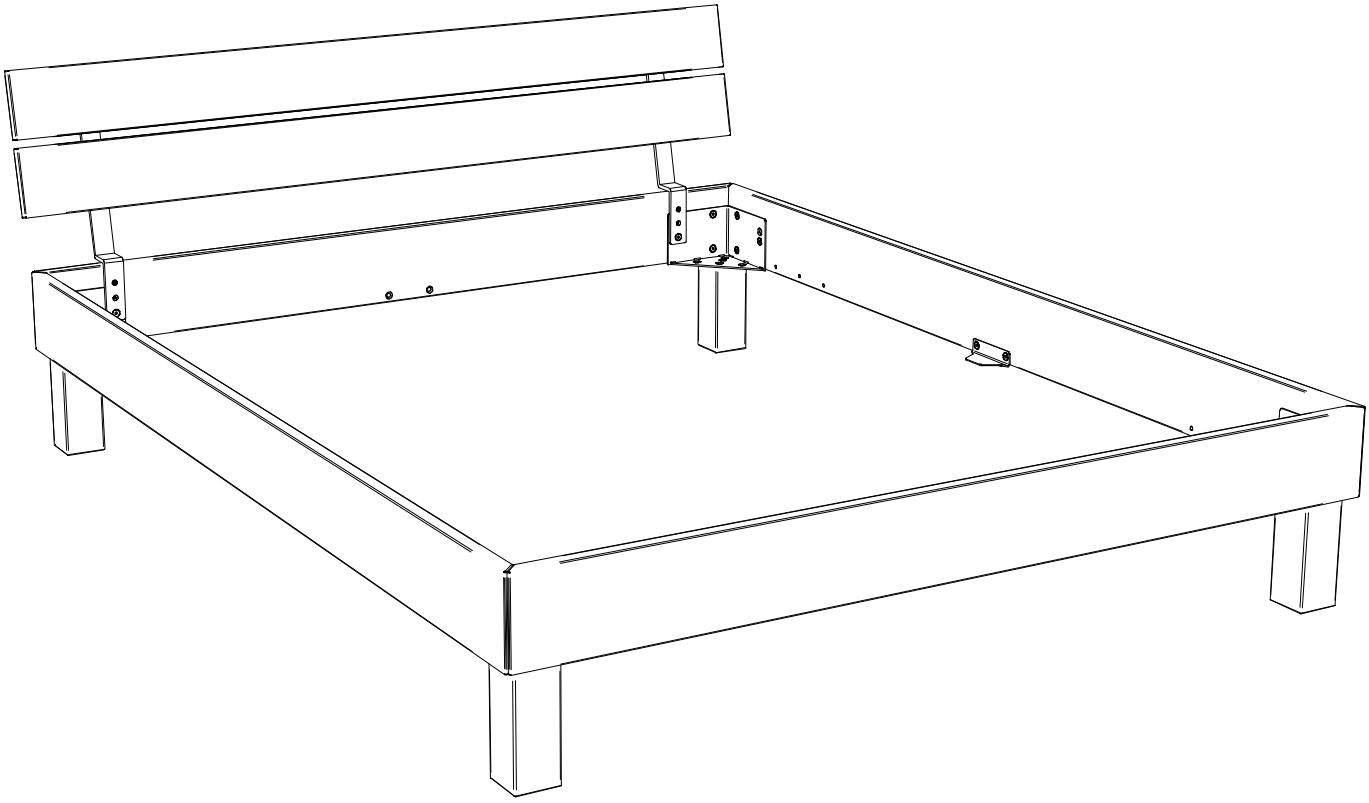

Benötigte Werkzeuge – Outils Nécessaires – Tools Required – Attrezzi Necessari

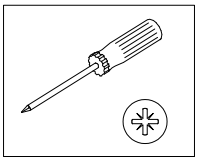

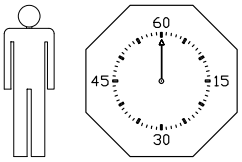

06.01.2021

660.01128

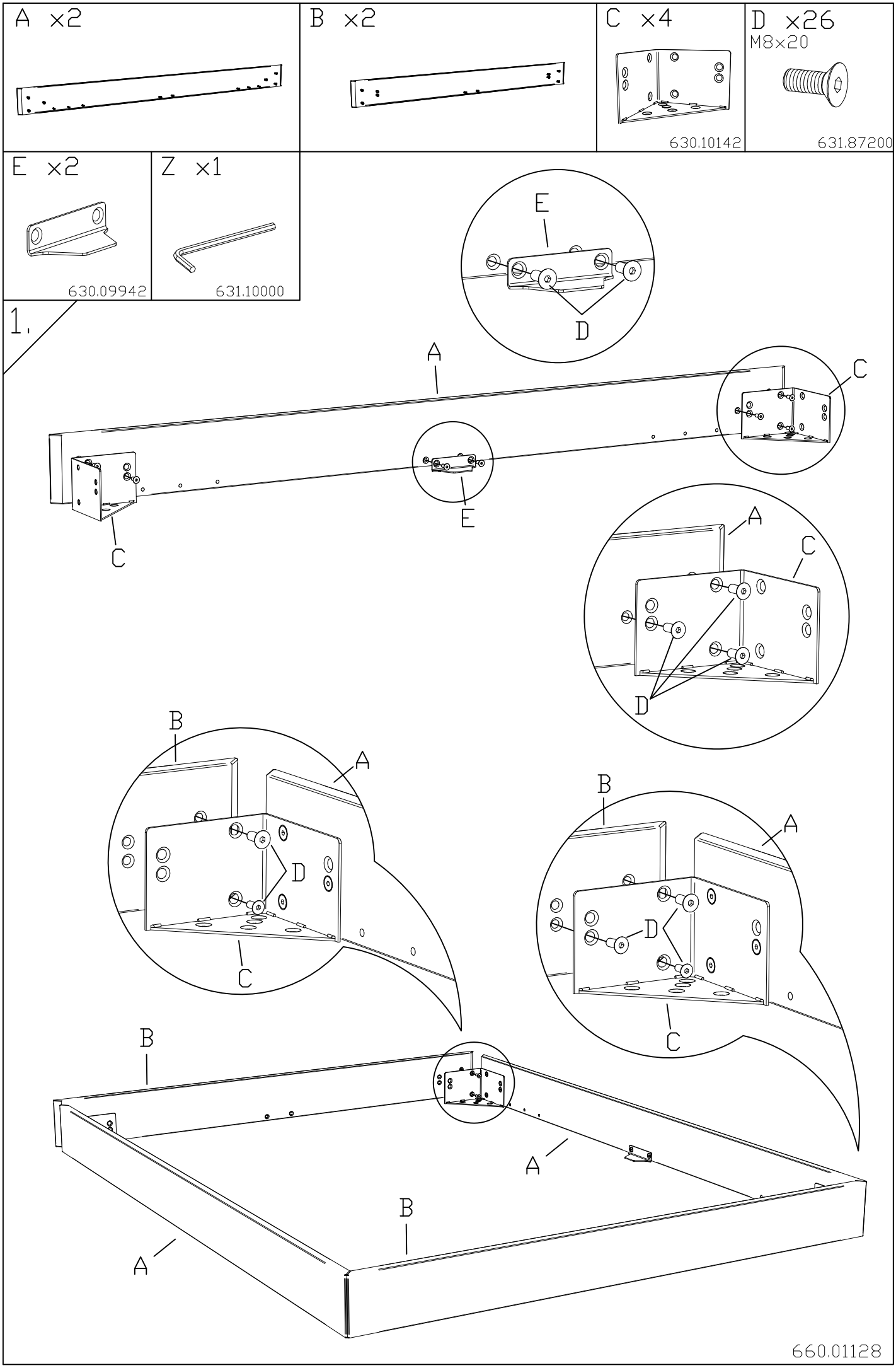
A x2
B x2
C x4
630.10142
D x26
M8x20
631.87200
E x2
630.09942
Z x1
631.10000
1.
E
D
A
C
E
C
A
C
D
B
A
D
C
B
A
D
C
B
A
B
A
660.01128

F x4	D x4 M8x20 631.87200

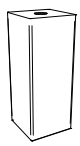

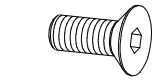

2.

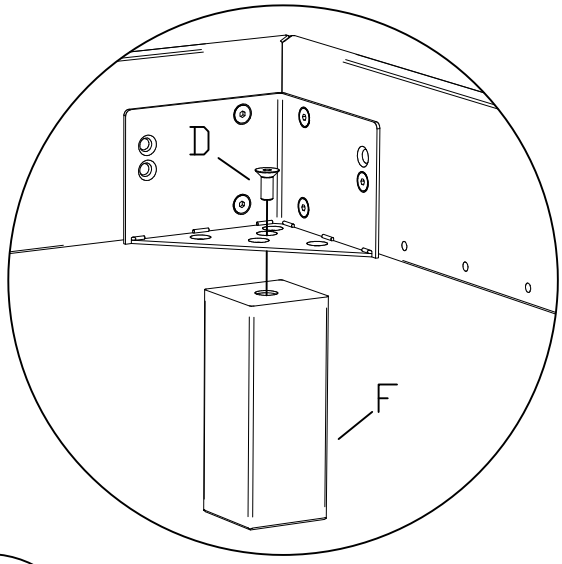

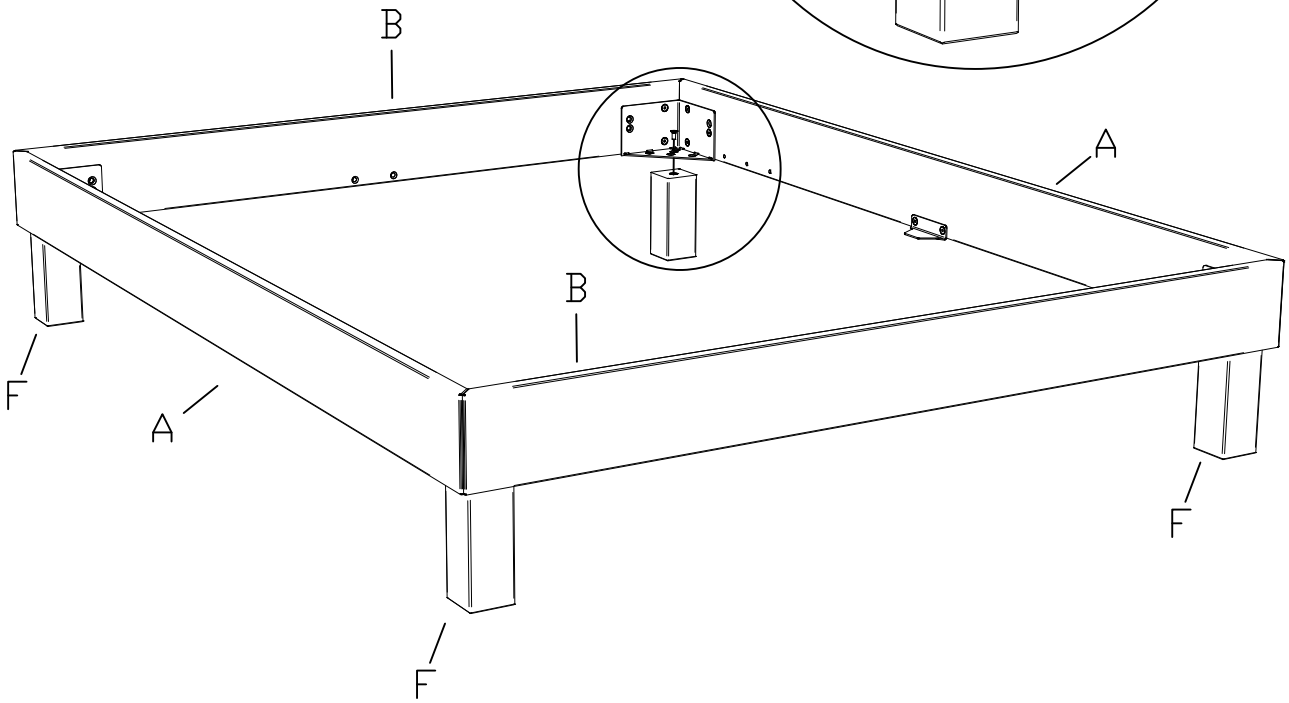

G x2	H x2	I x8 PH 5x25	K x2 M8x25	L x2 SK 5x25
	790.010	631.16500	631.10600	631.32100

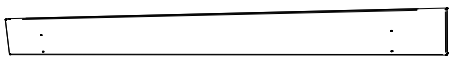

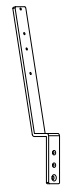

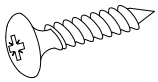

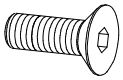

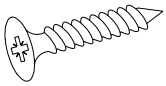

3.

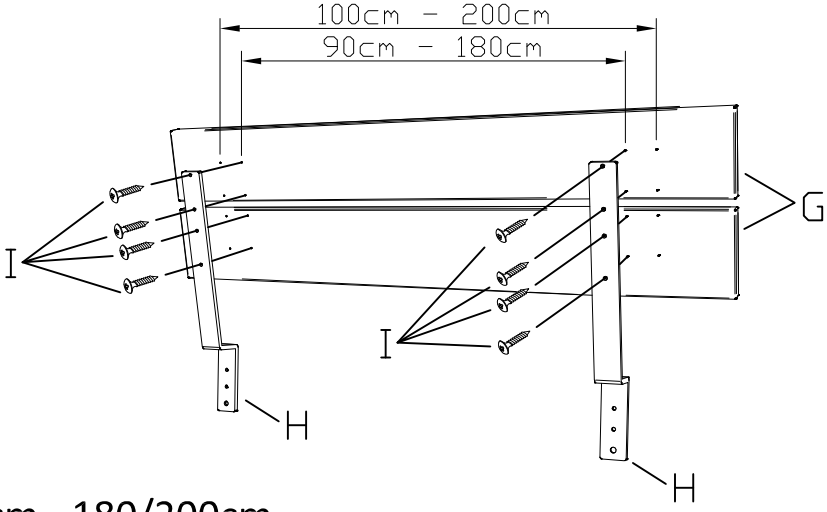

Variante A: 90/100cm - 180/200cm

660.01128

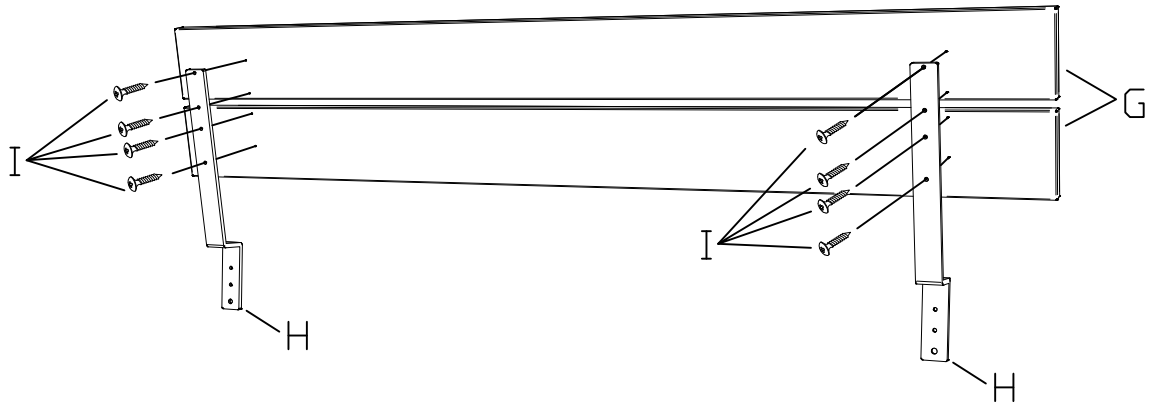

Variante B: 120/140/160cm

4.

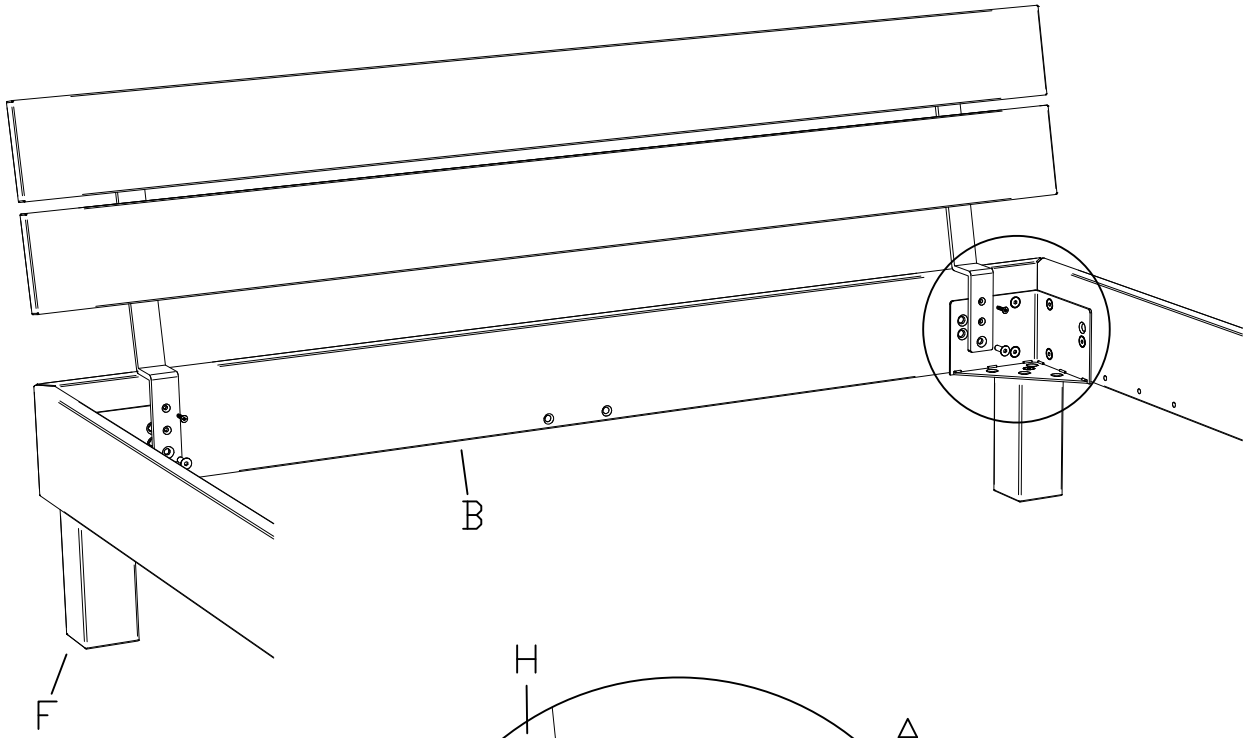

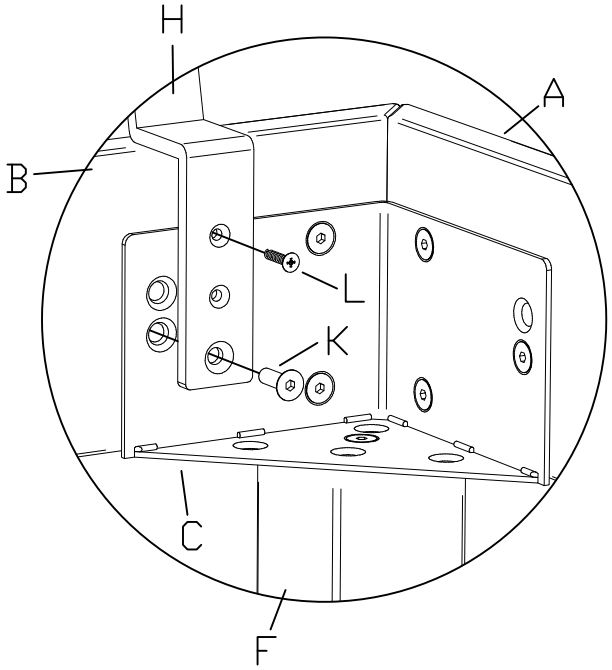

bei Breiten ab 160cm
for widths from 160cm
à partir des dimensions 160cm
della misura 160cm

M x2	N x2	D x6 M8x20
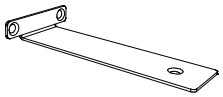	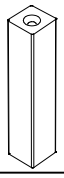	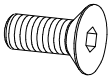
790.023		631.87200

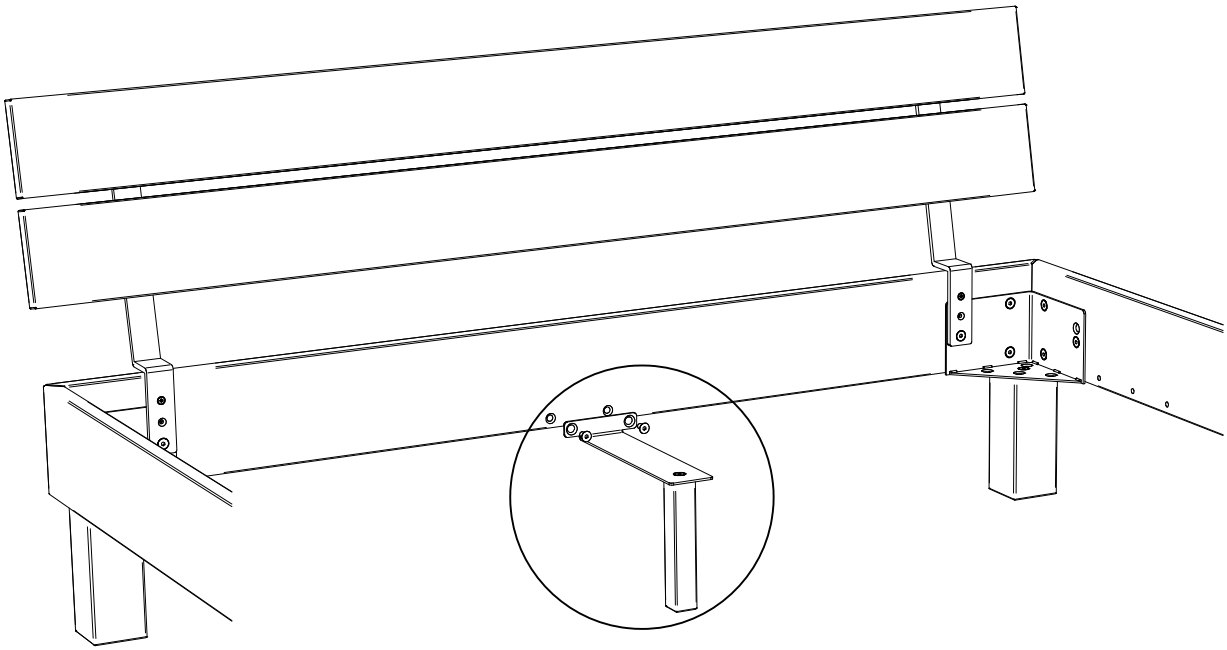

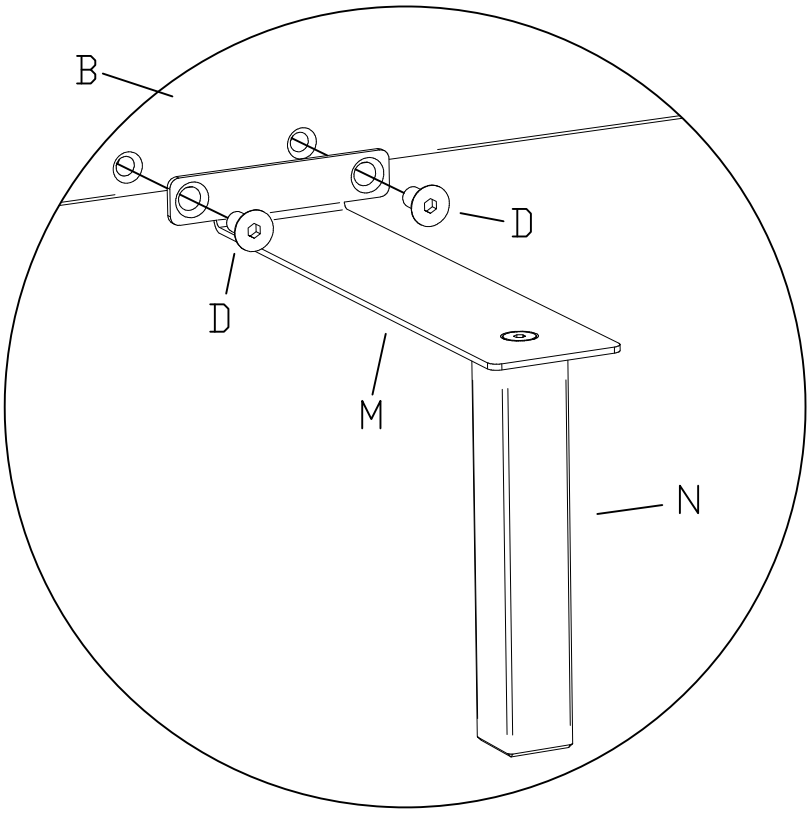

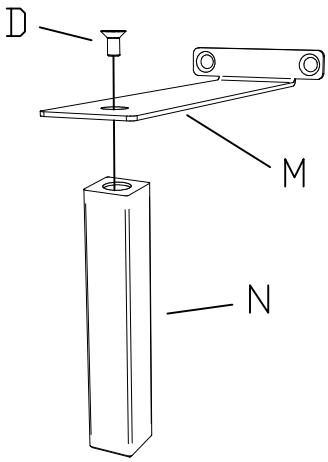

660.01128