INSTRUCTIONS

To reduce the risk of death, serious injury or property damage, please read and follow the safety information and provided instructions when assembling this product. Do not change or replace the components and accessories provided.

ATTENTION

1. For indoor use only.
2. You are advised to wear protective gloves when assembling the desk.
3. Do not fully tighten bolts until you have completed assembly.
4. It is highly recommended that you assemble the desk on a carpeted floor surface so as to prevent scratches.
5. It is highly recommended that you adjust the desk to its lowest height before moving.
6. Before lifting the desk, check if surroundings are clear and make sure desk power cord is able to move freely as the desk moves up and down
7. Do not spray cleaning solutions directly onto table system, clean only with a dry or slightly damp cloth.
8. Do not open electrical components.
9. Keep all electrical components away from water and high humidity.
10. Do not modify the plug provided with the product.
11. To disconnect, turn off all the power supply before removing the adapter from the outlet.
12. Check the desk parts on a monthly basis to ensure they are still functioning correctly.
13. Children are forbidden to play on the product because of unforeseen action when playing, so many dangerous consequences caused by this improper action will not be on manufacturers.
14. The electric box contains electronic components, metals, plastics, wires etc., so dispose of it in accordance with each country's environmental legislation, not the general household waste.

PART LIST

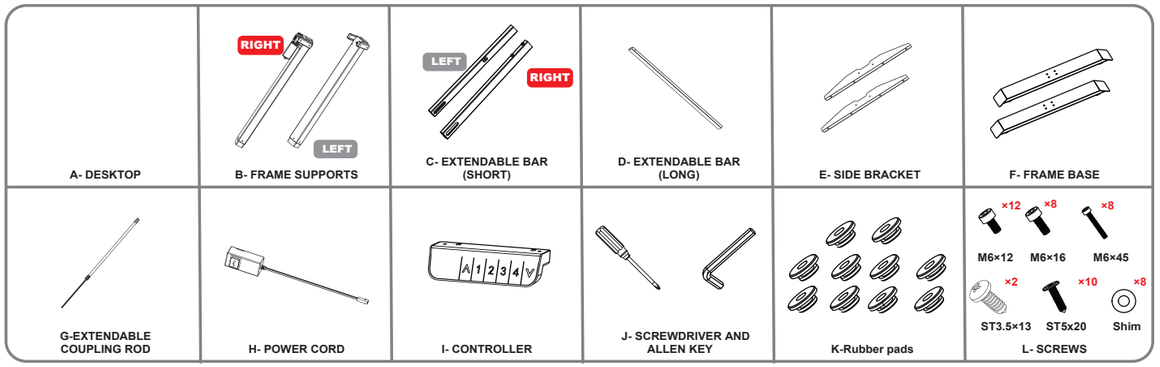

INSTALLATION

1 1. Insert the extendable bar (long) to 2 extendable bars (short).

2. Do not fix them with screws before completing the frame assembly.

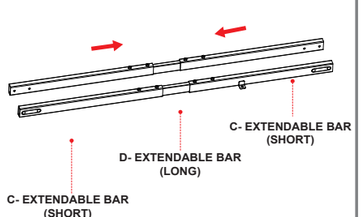

2 Install the frame supports (left & right) to the extendable bar (finished in step 1) with 8 pcs M6x16mm screws. (5mm Allen Key)

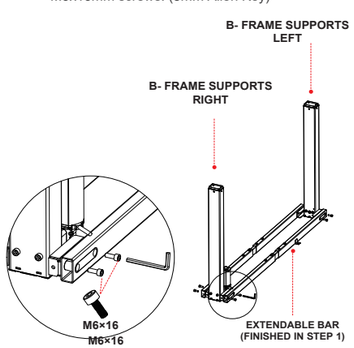

3 Install the side bracket to the frame with 4 pcs M6x12mm screws. (5mm Allen Key)

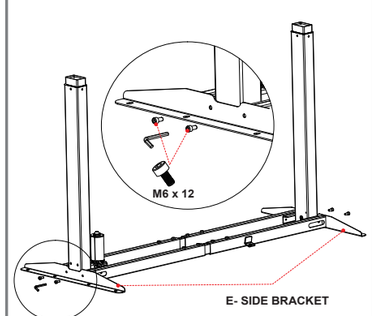

4 Install the frame base to frame support with 8 pcs M6 x 45mm screws. (5mm Allen Key)

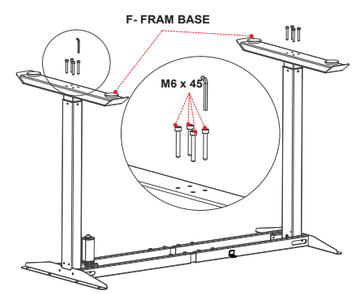

5 Install the desktop to the desk frame with 8 pcs shims and 10pcs ST5x20 screws.

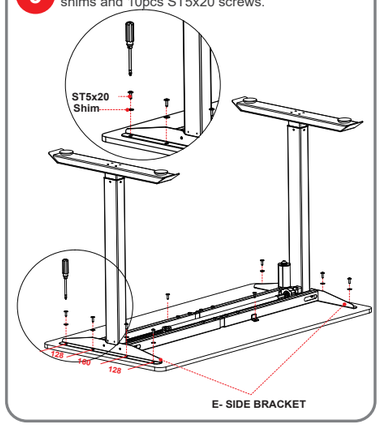

6-1 Install the extendable coupling rod to the desk frame and do not tighten the rod.

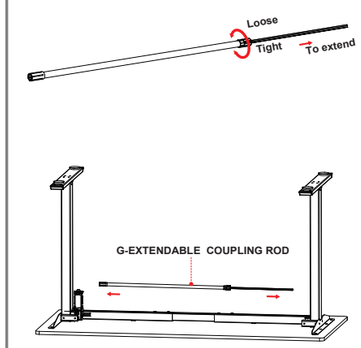

6-2

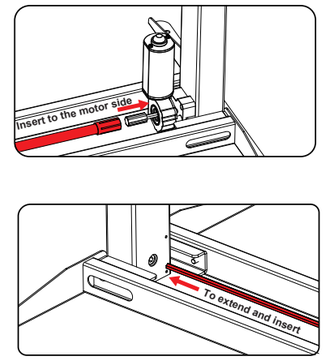

7 Fix the extendable bars by 8 pcs M6x12mm screws. (5mm Allen Key)

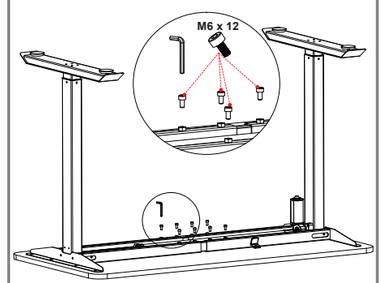

8 Install the controller to the desk top with 2 pcs ST3.5X13mm screws.

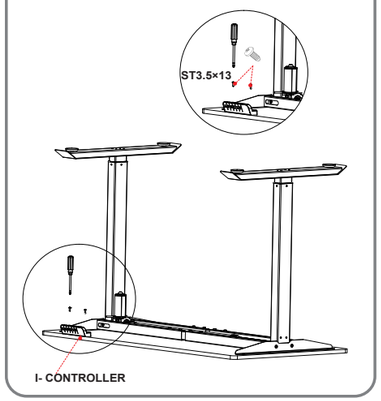

9 1. Connect the cable from motor to controller.

2. Connect the cable from power cord to the controller as well.

3. After connecting all the wiring, you may organize the cables using the cable clips.

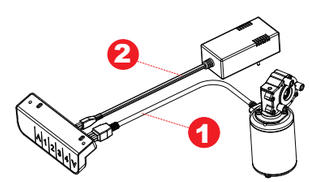

USE AND MAINTENANCE MANUAL

INSTRUCTIONS

To reduce the risk of death, serious injury or property damage, please read and follow the safety information and provided instructions when assembling this product. Do not change or replace the components and accessories provided.

CONTROLLER INSTRUCTIONS

Reset Setting	Press "∨" and "∧" buttons together on the controller for 4 seconds, it will show “000”, until you hear the beep release the buttons. The desk will automatically go down slowly. (It will have a rebound and rise about 5 mm/0.2in) until it shows "69" and when you hear the beep, the reset is successful.
Height Adjustment	Up: Press "∧" button. Down: Press "∨"button.
Switch Display	Press 2 times "∨" when the desk is at the lowest position to switch cm to inch.
Memory Height	Press and hold any of memory buttons (1,2,3 or 4) until you hear a beep. Release the button, and this position height will be stored in memory. When the working height of memory needs to be used, press the memory position button and the desk will automatically adjust to the memory height. **Note:** This standing desk has 4 different height memories. The memory positions stored are still valid after power off. You can use the up and down buttons to adjust the standing desk to the height you need to work.

PARAMETER INSTRUCTION

Electric Control Part:
Input Voltage: 100-240V AC 50/60Hz 2A
Duty cycle: 10% MAX 2 min on 18 min off

Desk Frame Part:
Dynamic load: 80kg/ 176.4lb
The maximum static load: 120kg/ 264.6lb
Load speed: 20mm/s (0.79 in/s)
Lift range: 690mm ~1150mm/ 27.2in ~ 45.3in
The length of the adjusting range: 1100mm ~1350mm/ 43.3in ~ 53.1in

Other Part:
Packing Size: 760mm×380mm×140mm/ 29.9in×15.0in×5.5in
Gross Weight: 18.5KG/40.8lb

COMMON FAULT TREATMENT

CODE	Description	Method
E02	Motor overcurrent	Press "∨" or "∧" button again, if it still persist, please replace the motor or reduce the load
E03	Motor Hall failure	Press "∨" or "∧" button again, if it still persist, please check the connection or replace the motor
E04	The main power supply is abnormal	After power off, if it can not be eliminated, please replace the power supply
E05	Motor current is abnormal	After power off, if it can not be eliminated, please contact with your supplier or dealer
E06	Motor power device is damaged	After power off, if it can not be eliminated, please contact with your supplier or dealer
E09	Motor stalled	Press "∨" or "∧" button again, if it still persist, please replace the motor or reduce the load
E10	Anti-pinch triggering	
Hot	The motor is working too long time	1- Wait 18 mins, the code will disappear automatically 2- Unplug the power supply and power back on
RST	Illegal power off	Reset the program

Waste Disposal

Correct Disposal of this product

This marking indicates that this product should not be disposed with other household wastes according to your local rules. To prevent possible harm to the environment or human health from uncontrolled waste disposal, recycle it responsibly to promote the sustainable reuse of material resources. To return your used device, please use the return and collection systems or contact the retailer where the product was puchased. They can take this product for environmentally safe recycling.