3001058

Brisbane Display Cabinet, white with two glass doors and two metal doors

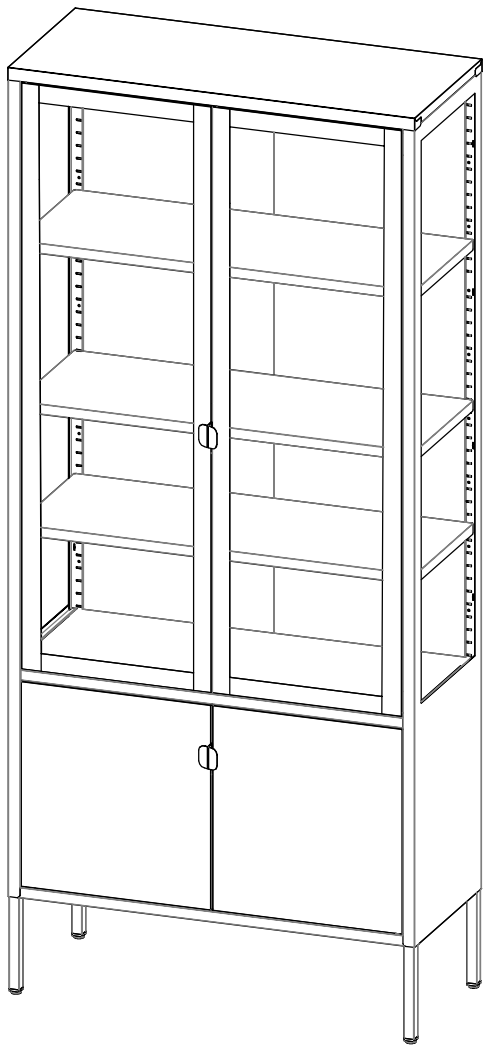

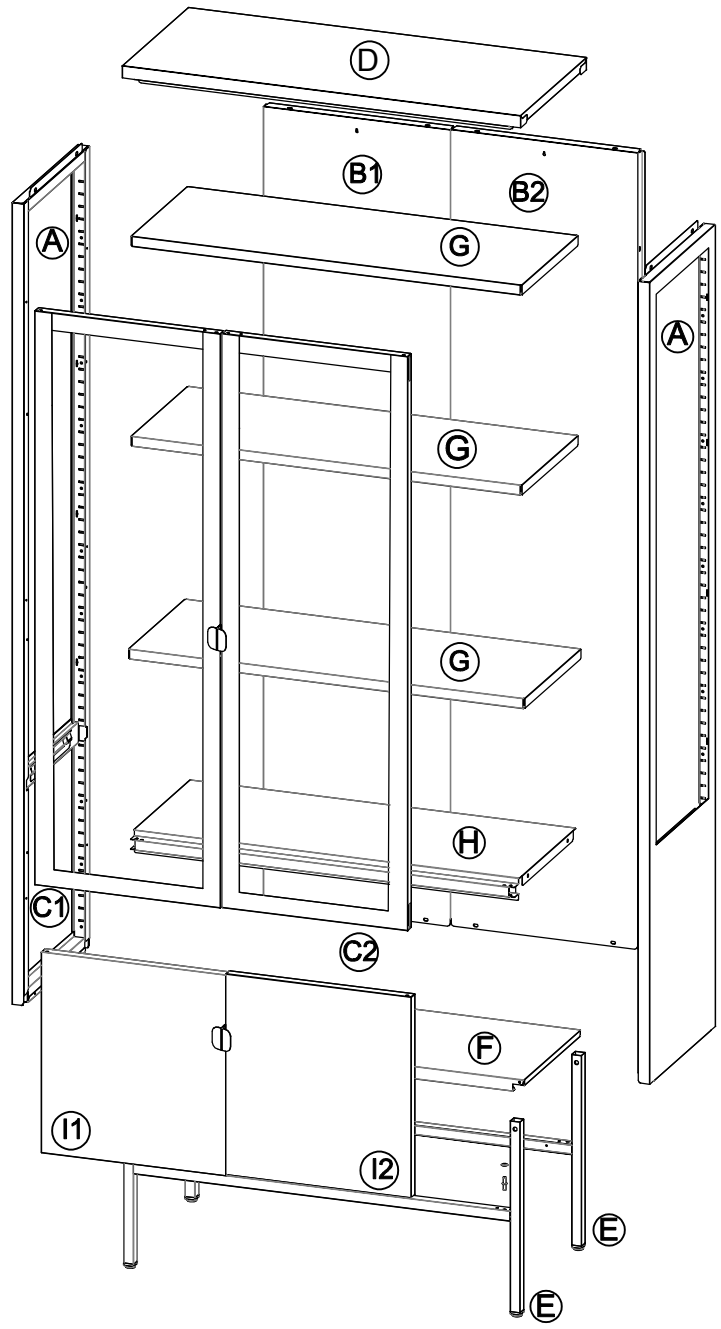

(1) - Attach (A) to (E) as below shown.

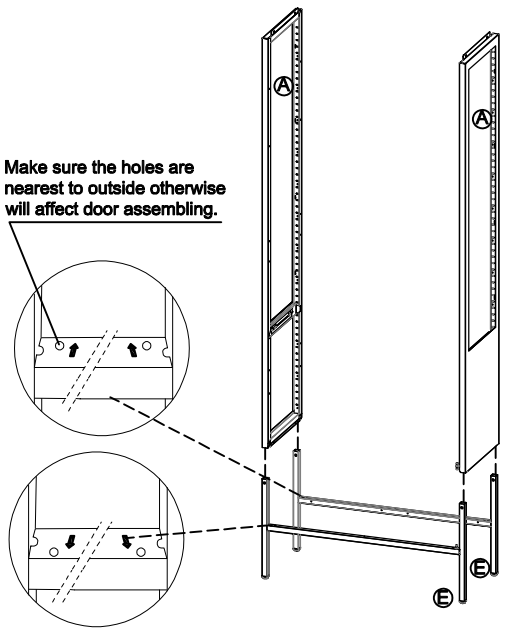

The plastic foot cover face down

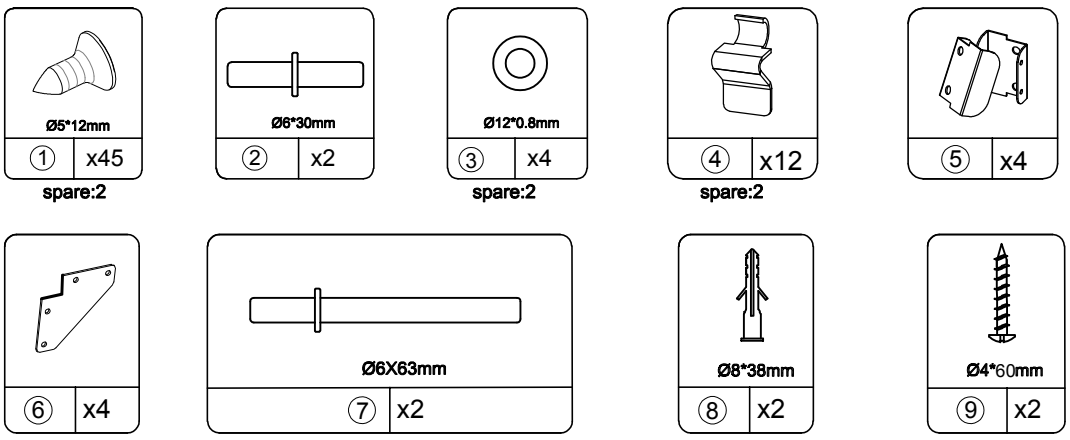

(2) - Attach (6) to (E) as below shown.

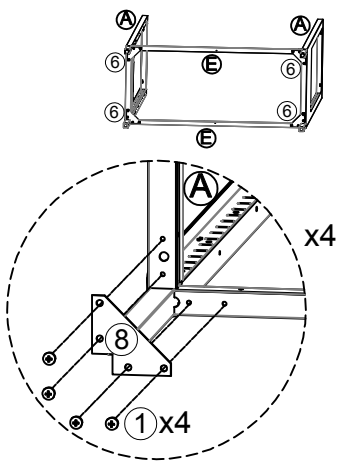

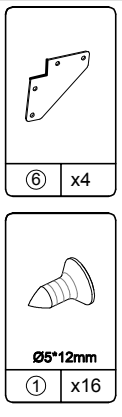

(3) - Attach (B) to (A) & (E) as below shown.

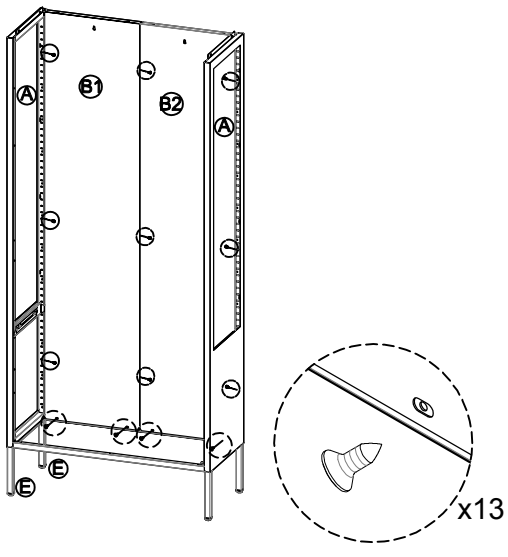

(4) - Attach (F) to (A) & (B) & (E) as below shown.

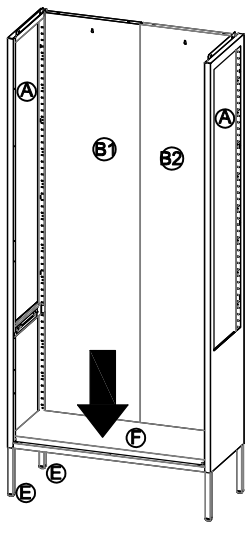

(5) - Attach (D) to (A) as below shown.

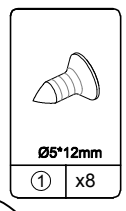

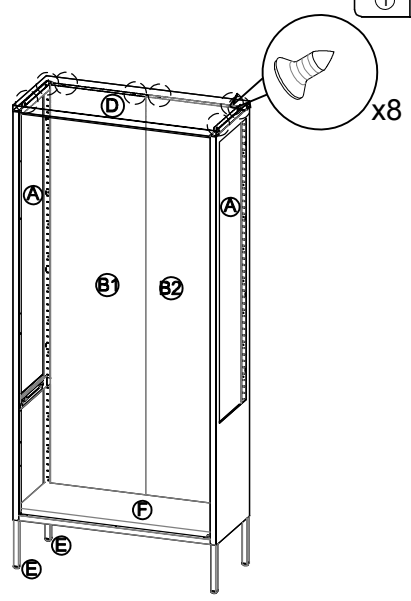

(6) - Attach (H) to (A) & (B) as below shown.

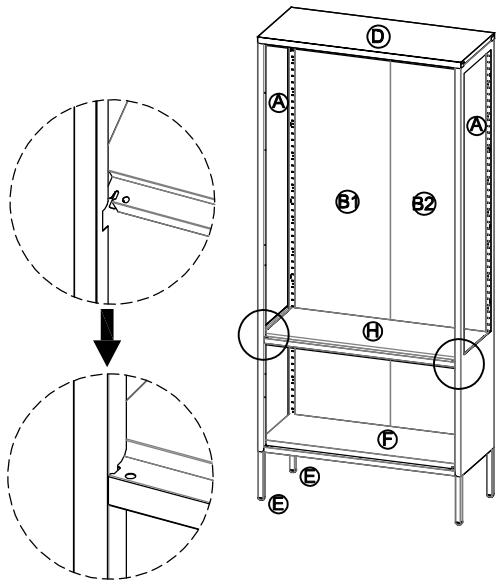

(7) - Attach (G) to pre-assembled unit as below shown.

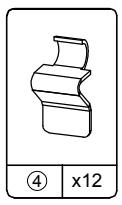

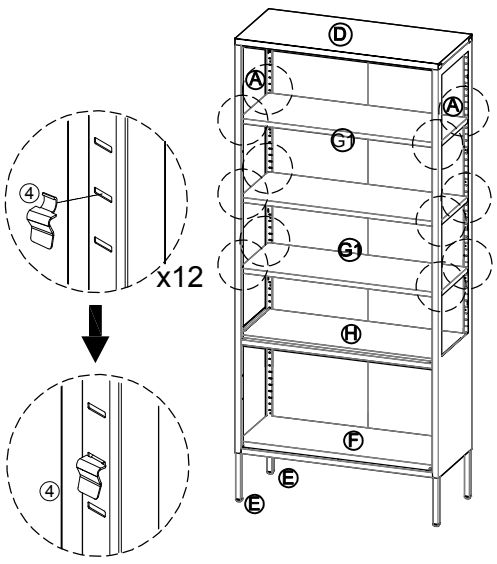

(9) -Attach (2) & (3) to pre-assembled unit as below shown.

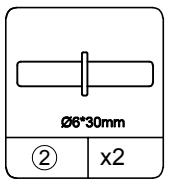

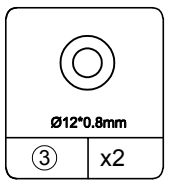

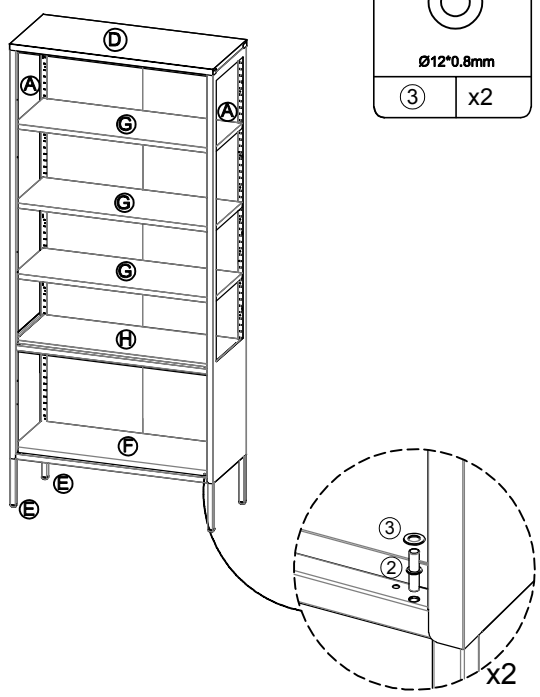

(10) - Attach (I) to pre-assembled unit as below shown.

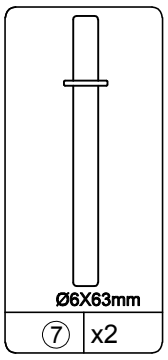

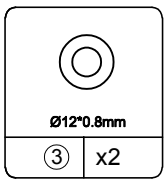

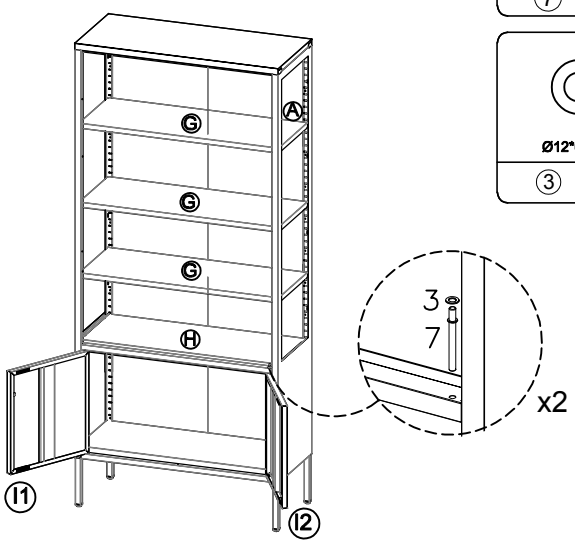

(11) - Attach (C) to pre-assembled unit as below shown.

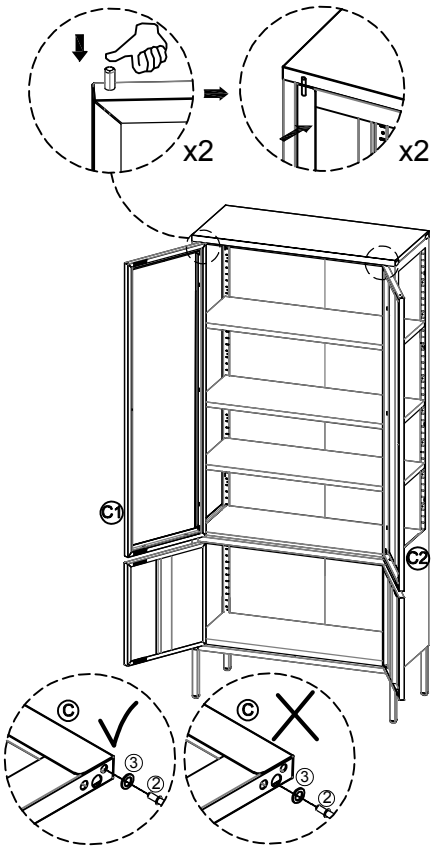

(12) - Attach (5) to (C) as below shown.

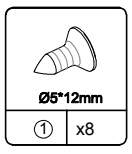

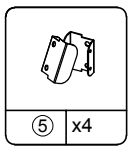

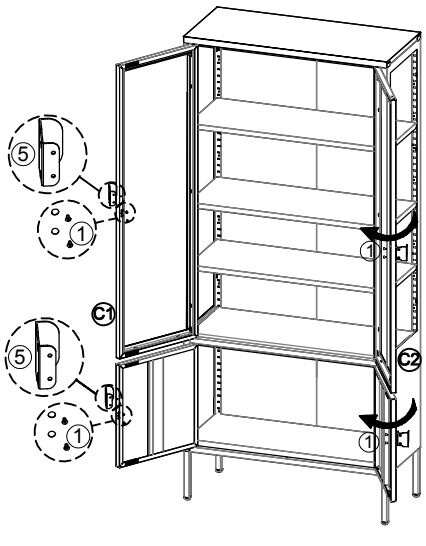

(13)

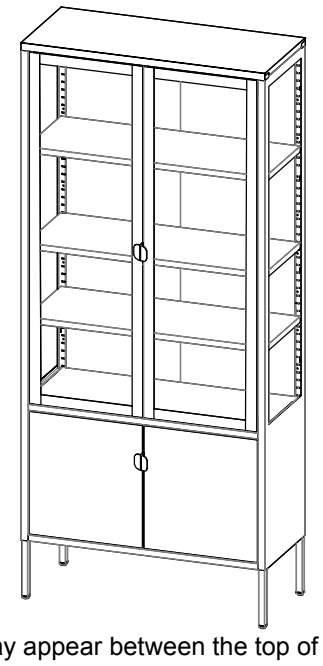

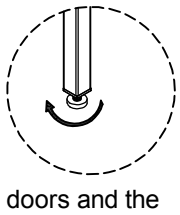

Gaps may appear between the top of the doors and the frame if the item is not on level ground; use the plastic foot cover to level.
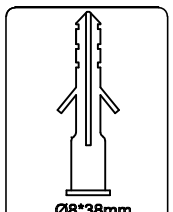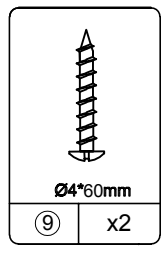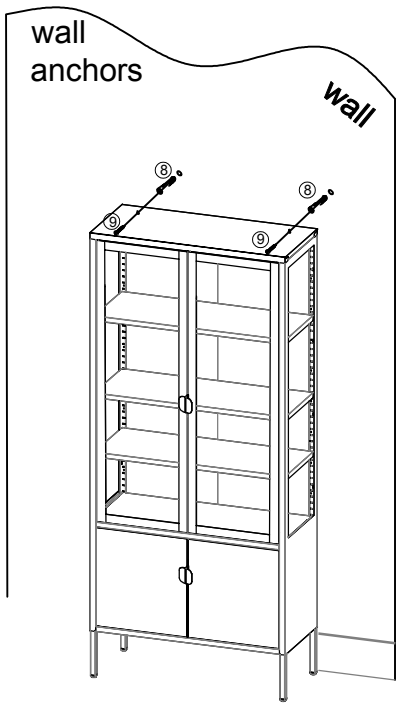
(14)