

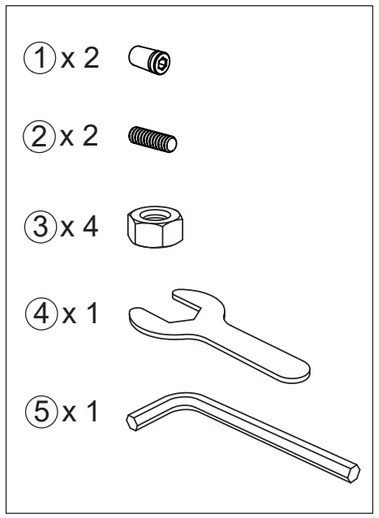

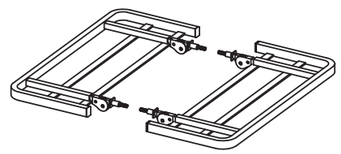

A x 2

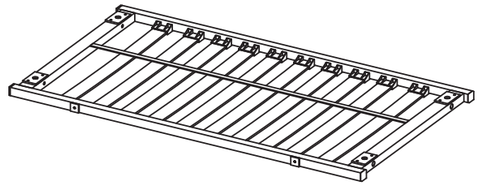

B x 1

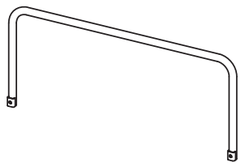

C x 1

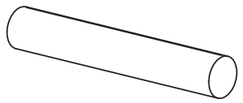

D x 1

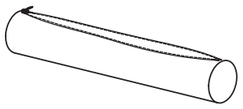

E x 1

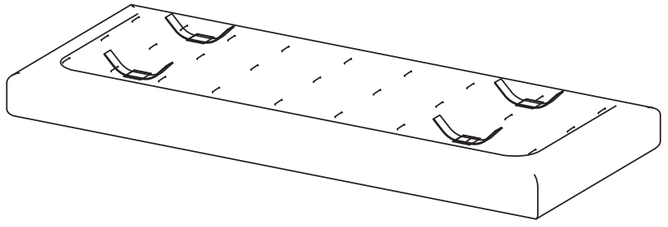

F x 1



069722-01

1

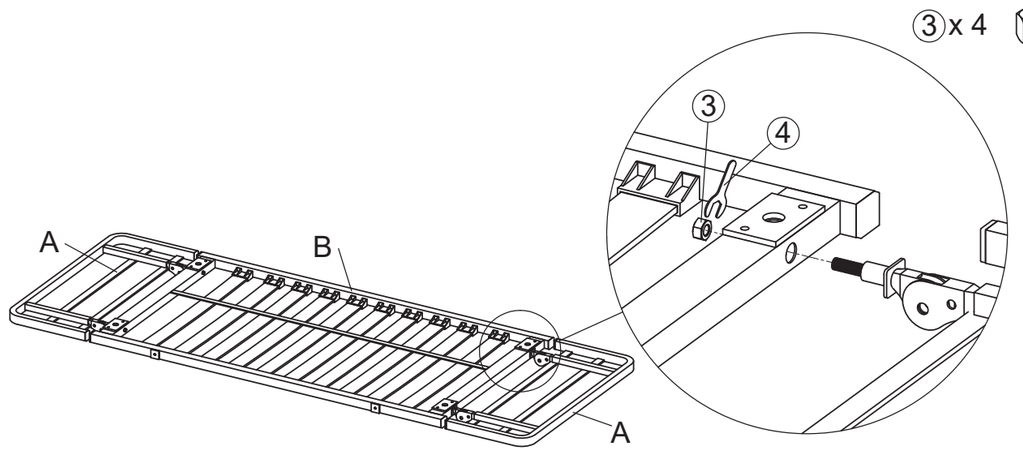

2

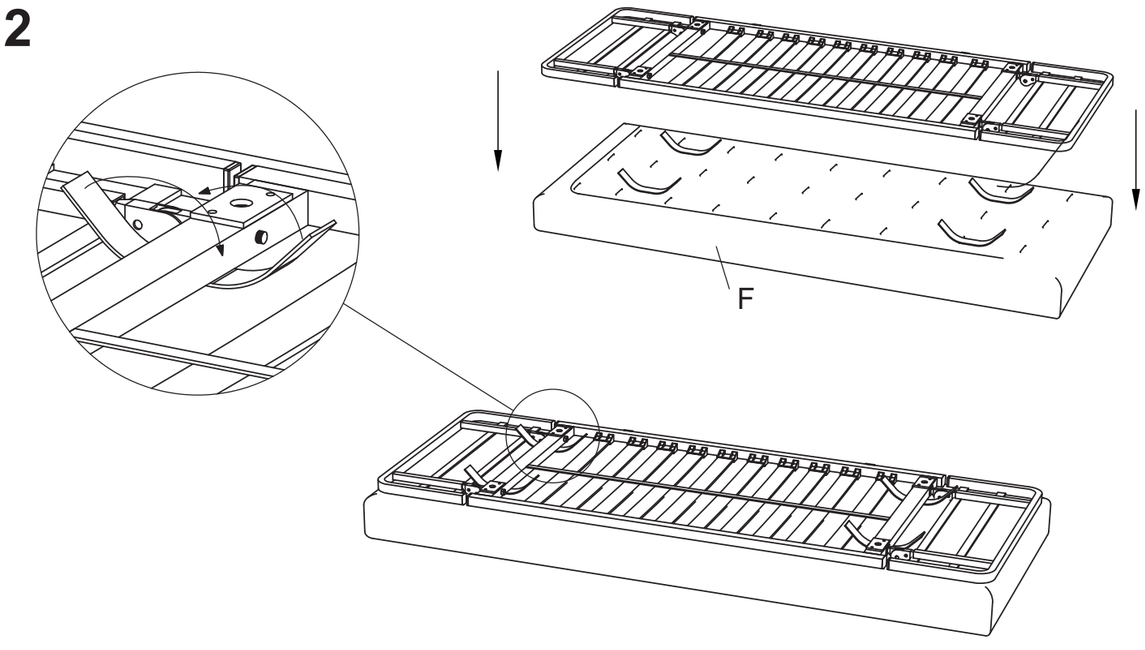

3

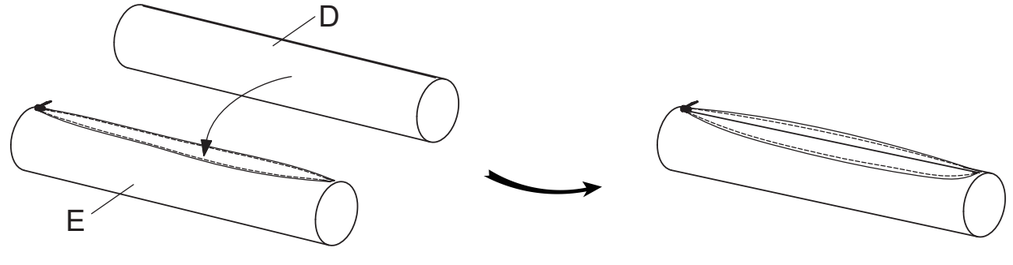

37.22

069722-01

1

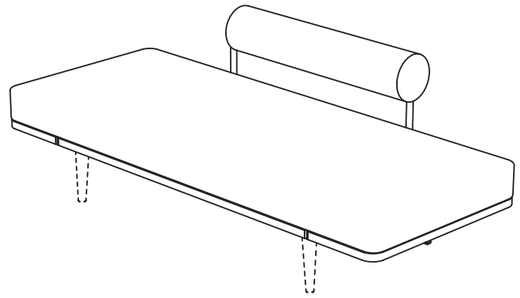

2

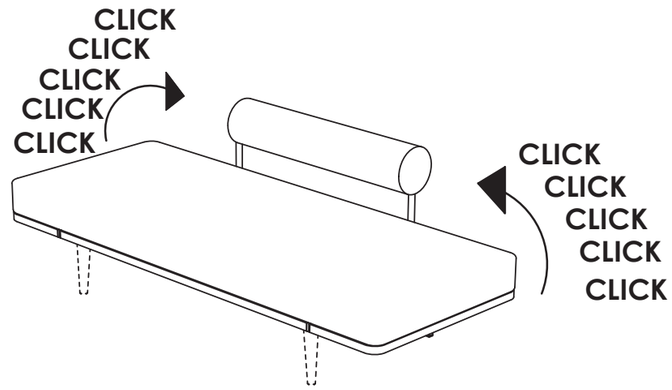

3

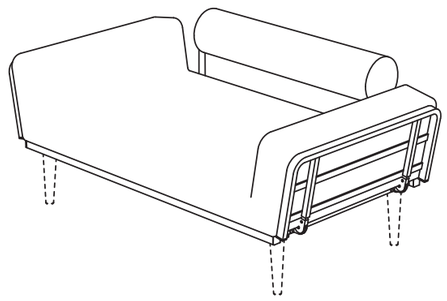

4

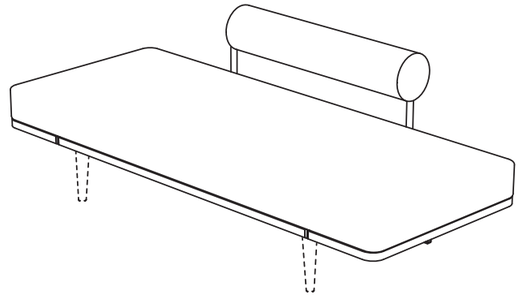

37.22

4

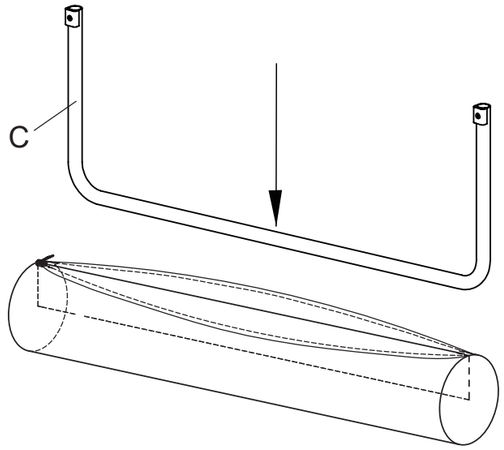

5

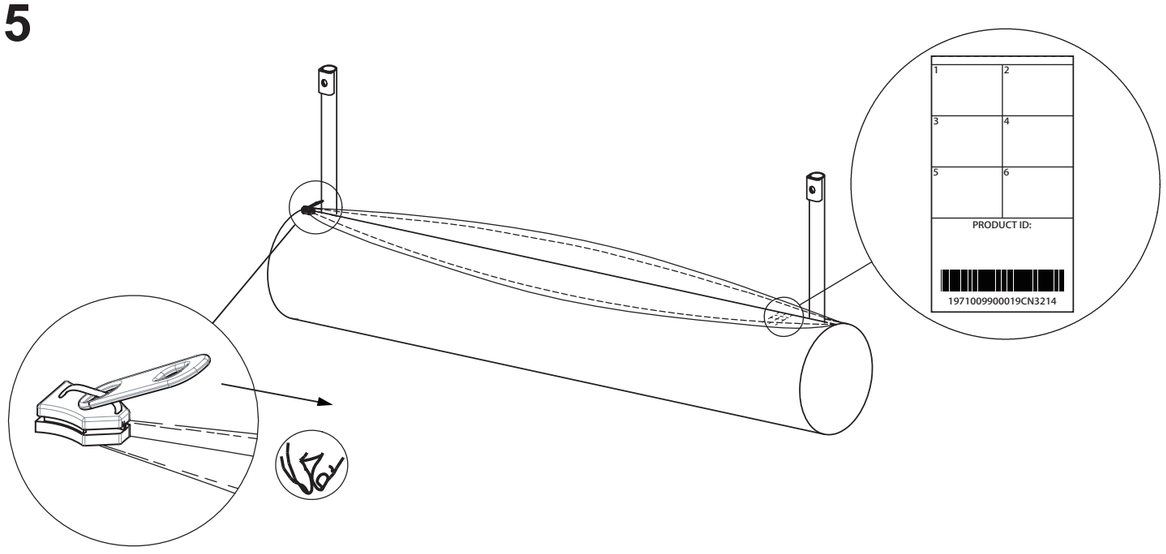

6

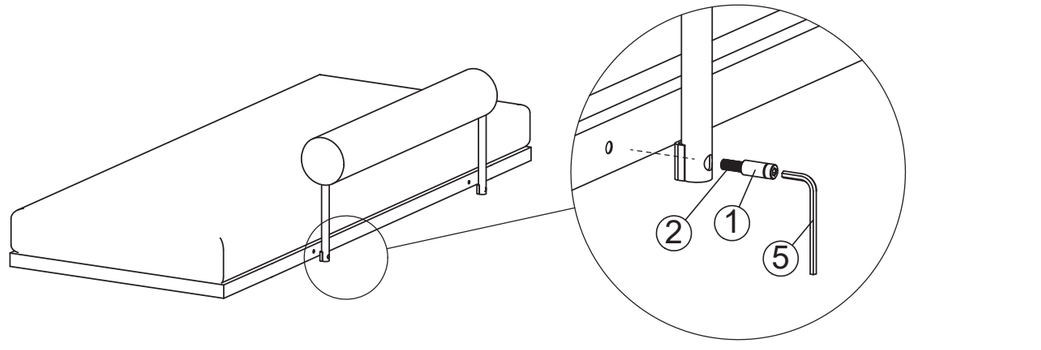

069722-01

1

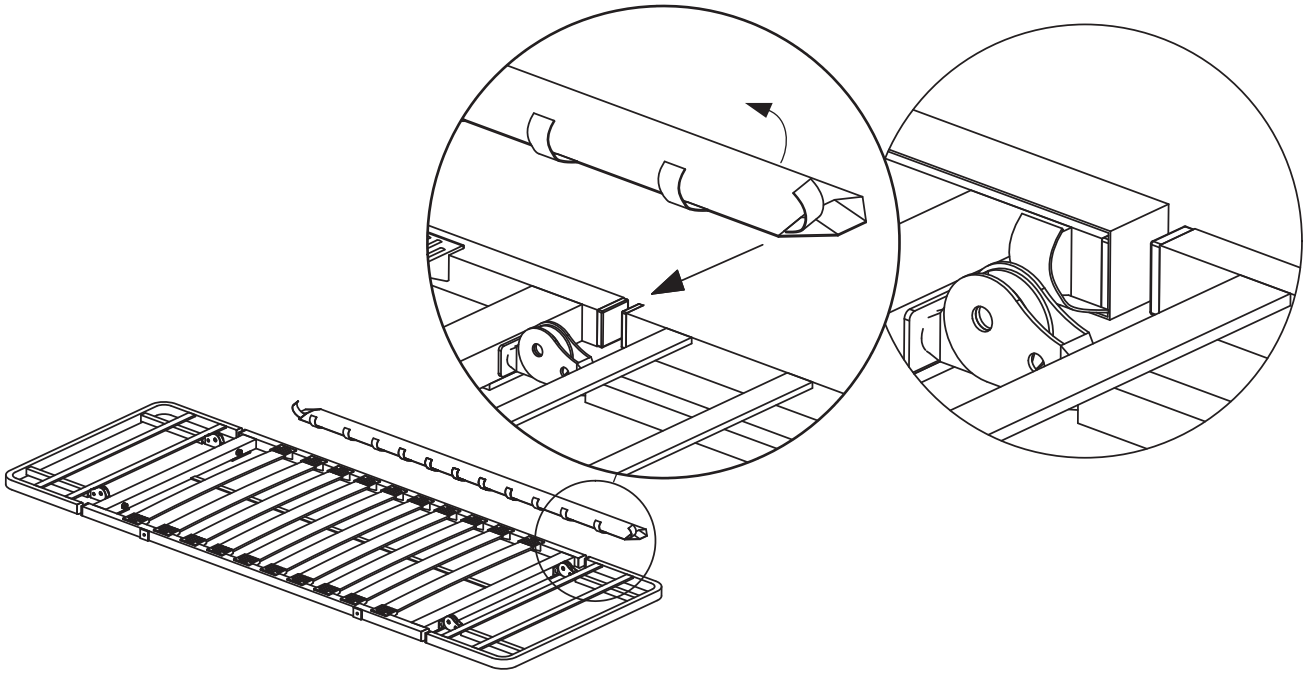

2

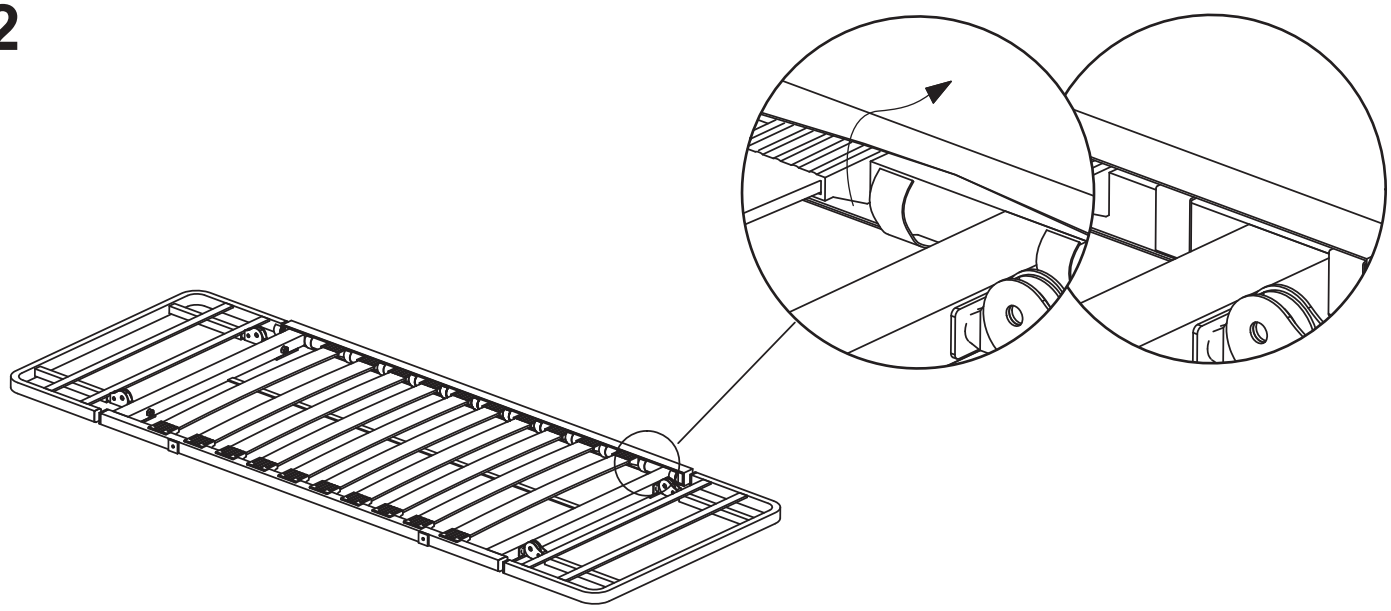

3

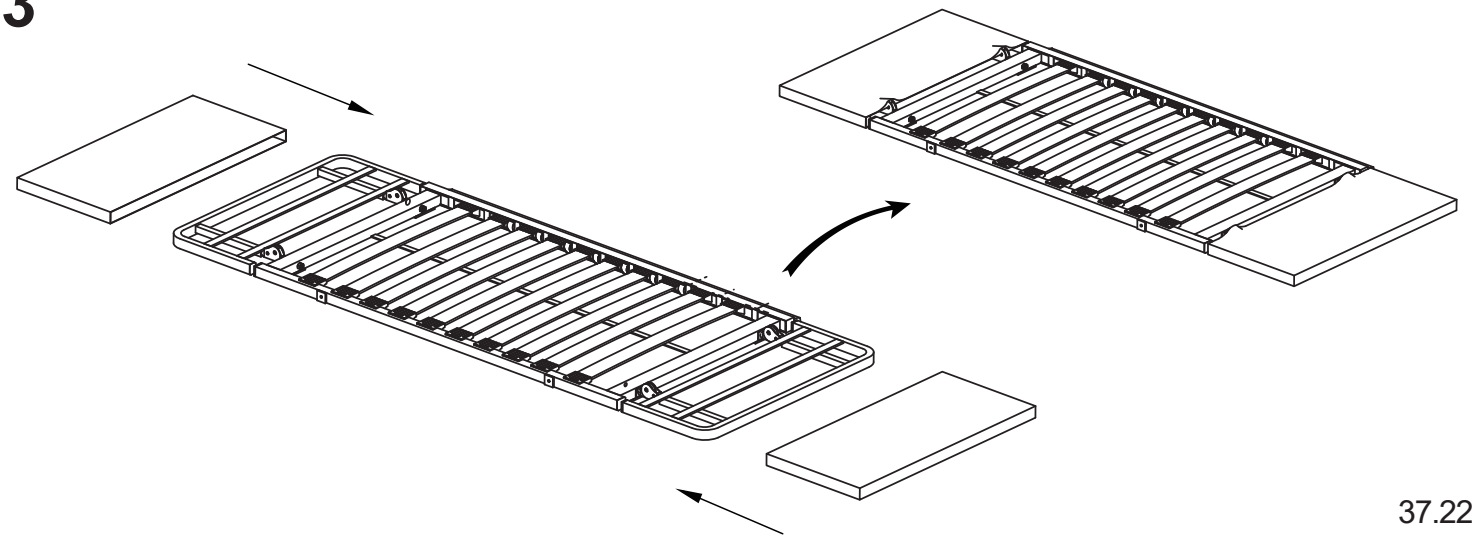

37.22

www.innovationliving.com

069727

① X4

② X8

③ X1

④ X4

⑤ X4

A X 4

B X 1

1

② X8

④ X4

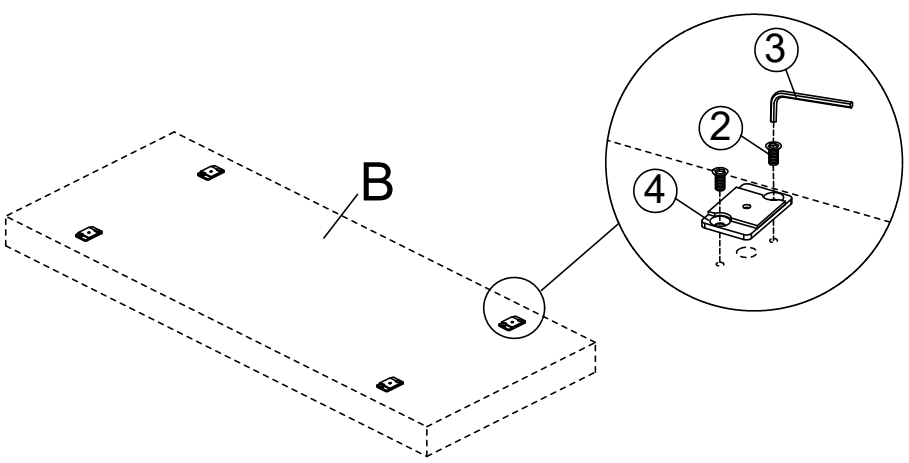

2

① X4

⑤ X4

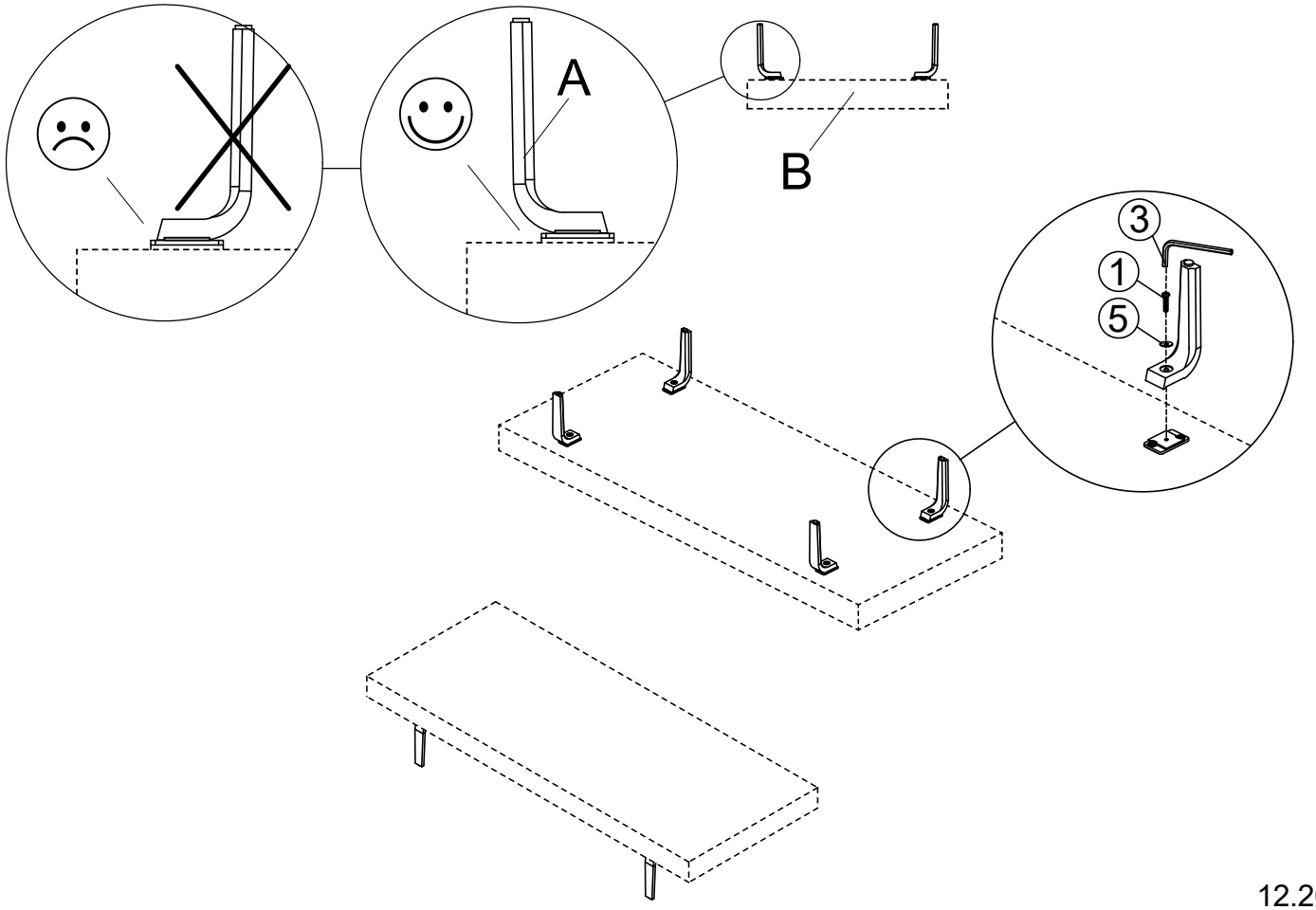

12.20