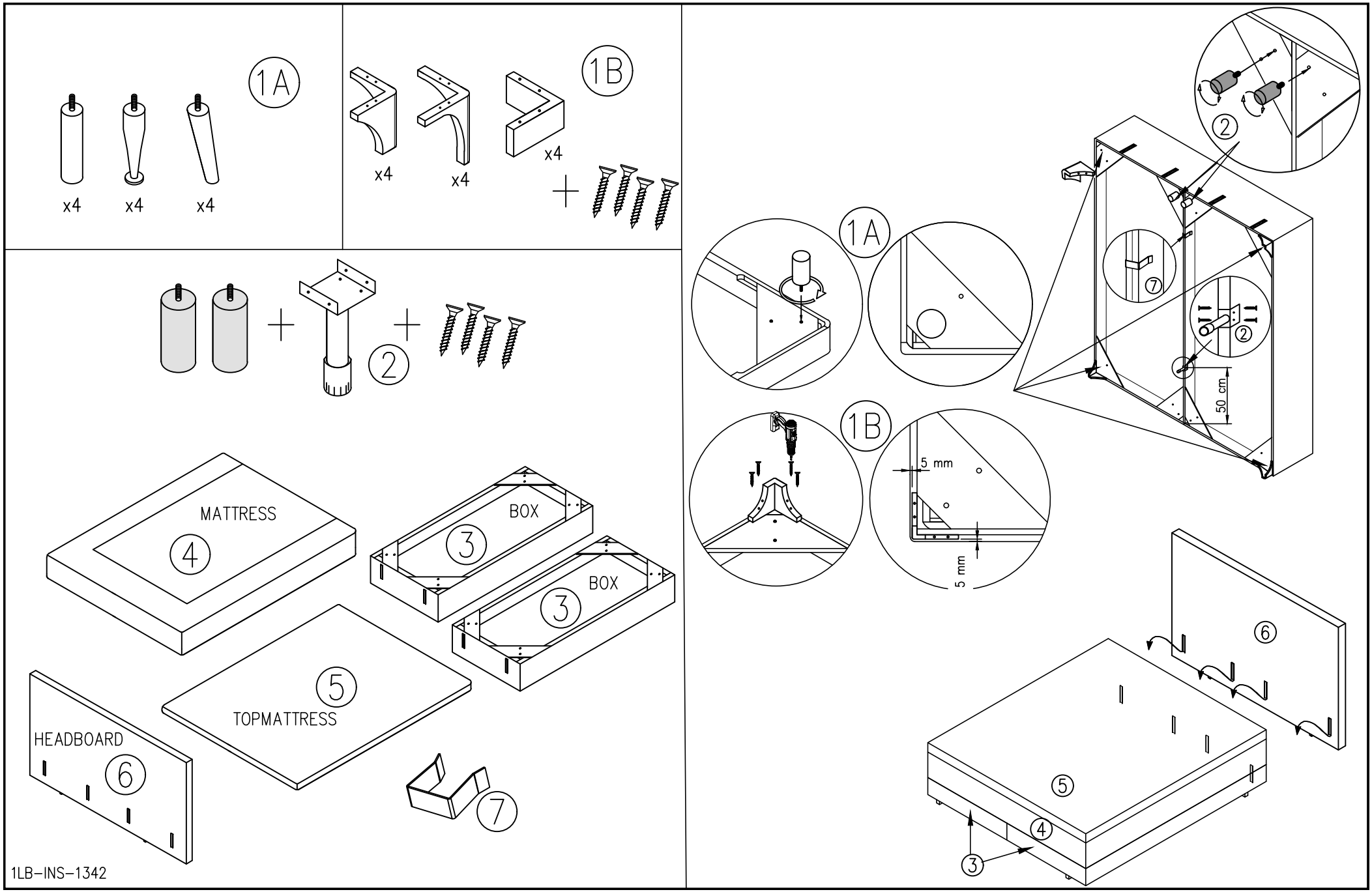
1A
x4
x4
x4
1B
x4
x4
x4
2
MATTRESS
4
BOX
3
BOX
3
5
TOPMATTRESS
HEADBOARD
6
7
1A
1B
5 mm
5 mm
2
7
2
50 cm
6
5
4
3
1LB-INS-1342

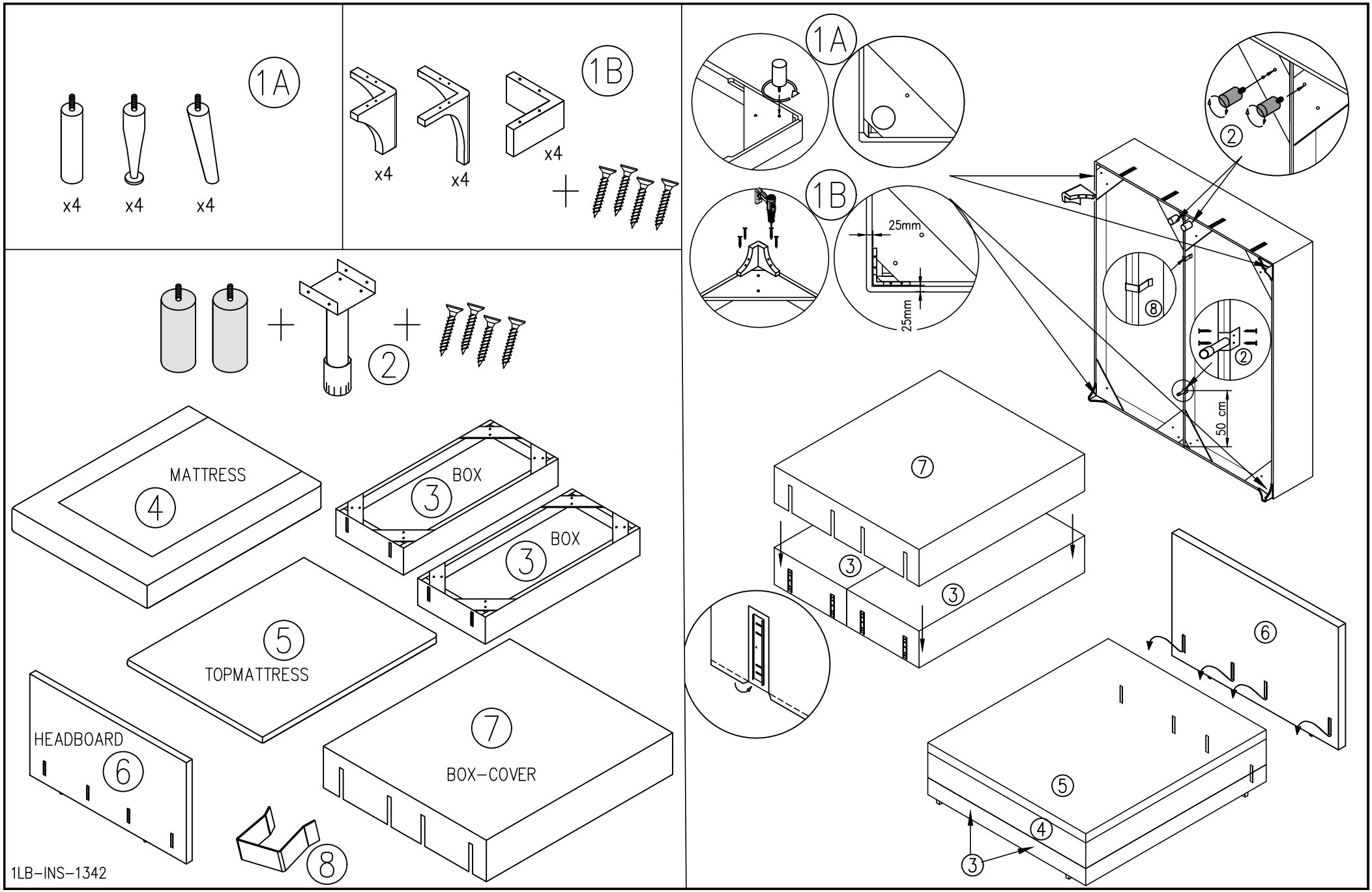
1A
x4
x4
x4
1B
x4
x4
x4
2
MATTRESS
4
BOX
3
BOX
3
5
TOPMATTRESS
HEADBOARD
6
7
BOX-COVER
8
1LB-INS-1342
1A
1B
25mm
25mm
2
8
2
50 cm
7
3
3
6
5
4
3