swiss bed concept

MONTAGEANLEITUNG
NOTICE DE MONTAGE
ASSEMBLY INSTRUCTION
ISTRUZIONE DI MONTAGGIO

HASENA
the dream factory

Ancona

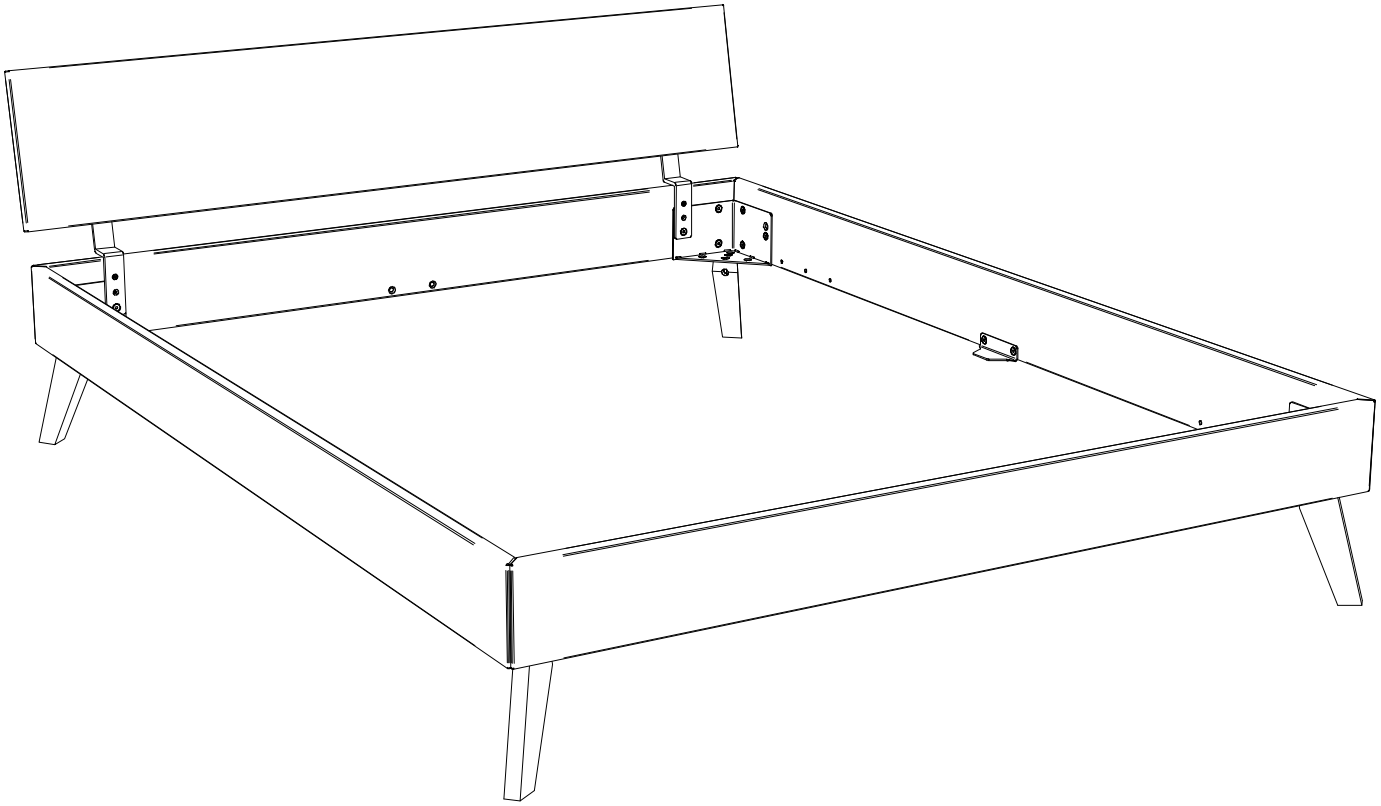

Benötigte Werkzeuge – Outils Nécessaires – Tools Required – Attrezzi Necessari

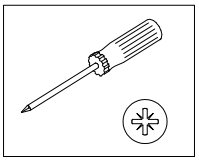

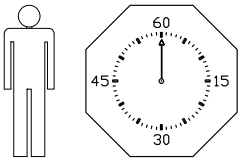

07.01.2021

660.01133

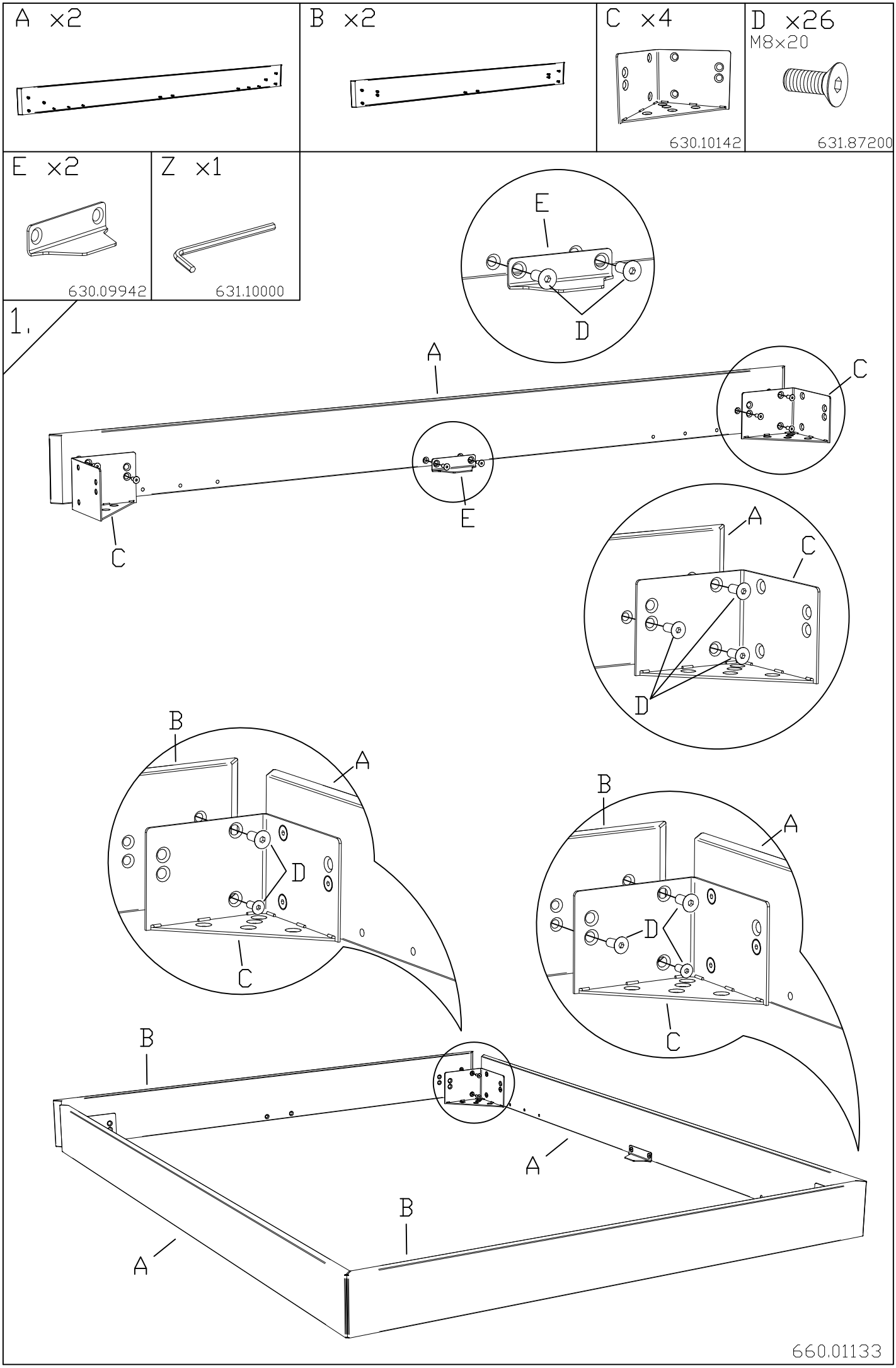
A x2
B x2
C x4
630.10142
D x26
M8x20
631.87200
E x2
630.09942
Z x1
631.10000
1.
E
D
A
C
E
C
A
C
D
B
A
D
C
B
A
D
C
B
A
B
A
660.01133

F x4	G x4 M8x40 631.877	H x4 631.611

2.

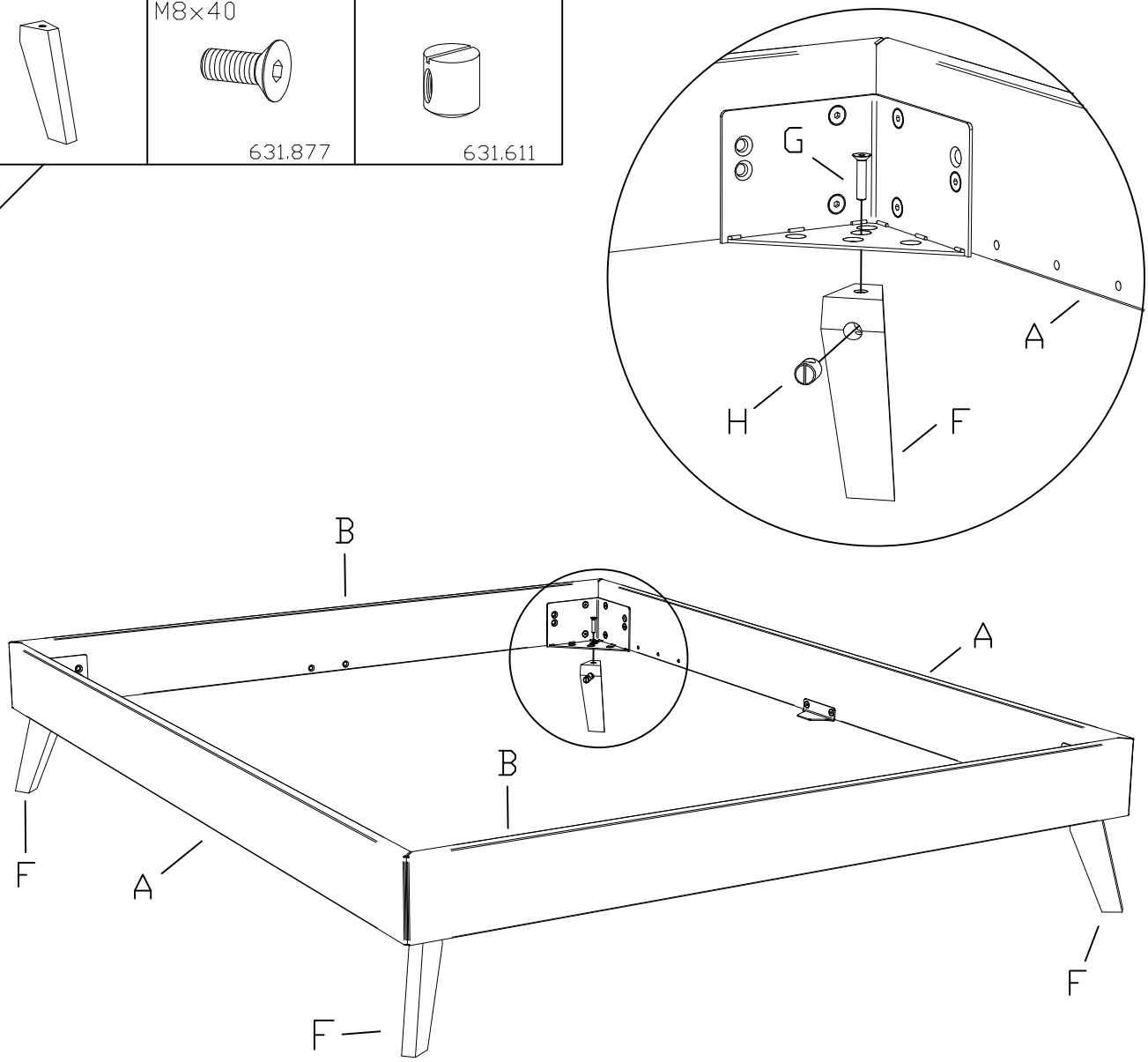

I x1	K x2 790.010	L x4 PH 5x25 631.16500	M x2 M8x25 631.10600	N x2 SK 5x25 631.32100

3.

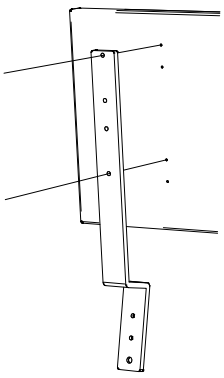

Variante 1

?

oder / or / ou

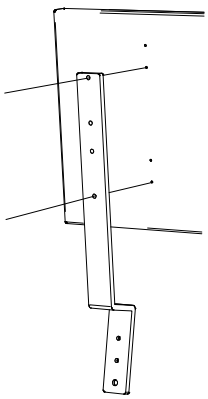

Variante 2

660.01133

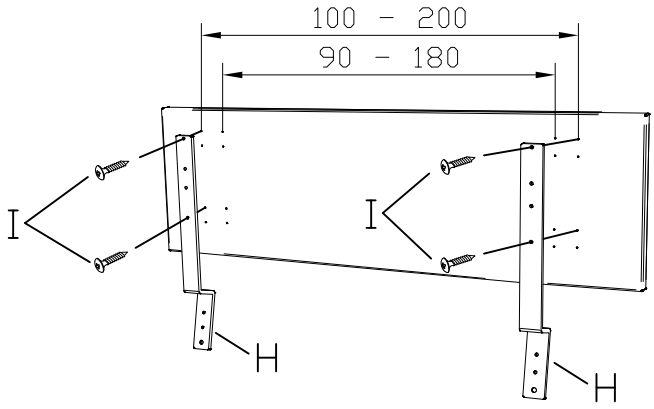

Variante A: 90/100cm - 180/200cm

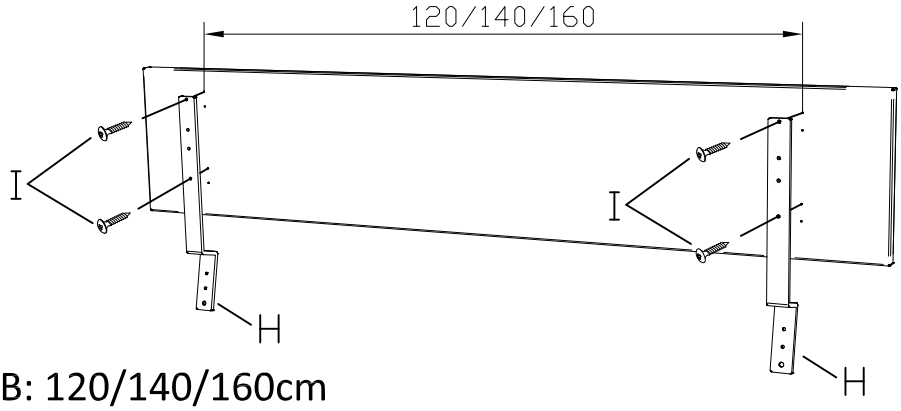

Variante B: 120/140/160cm

4.

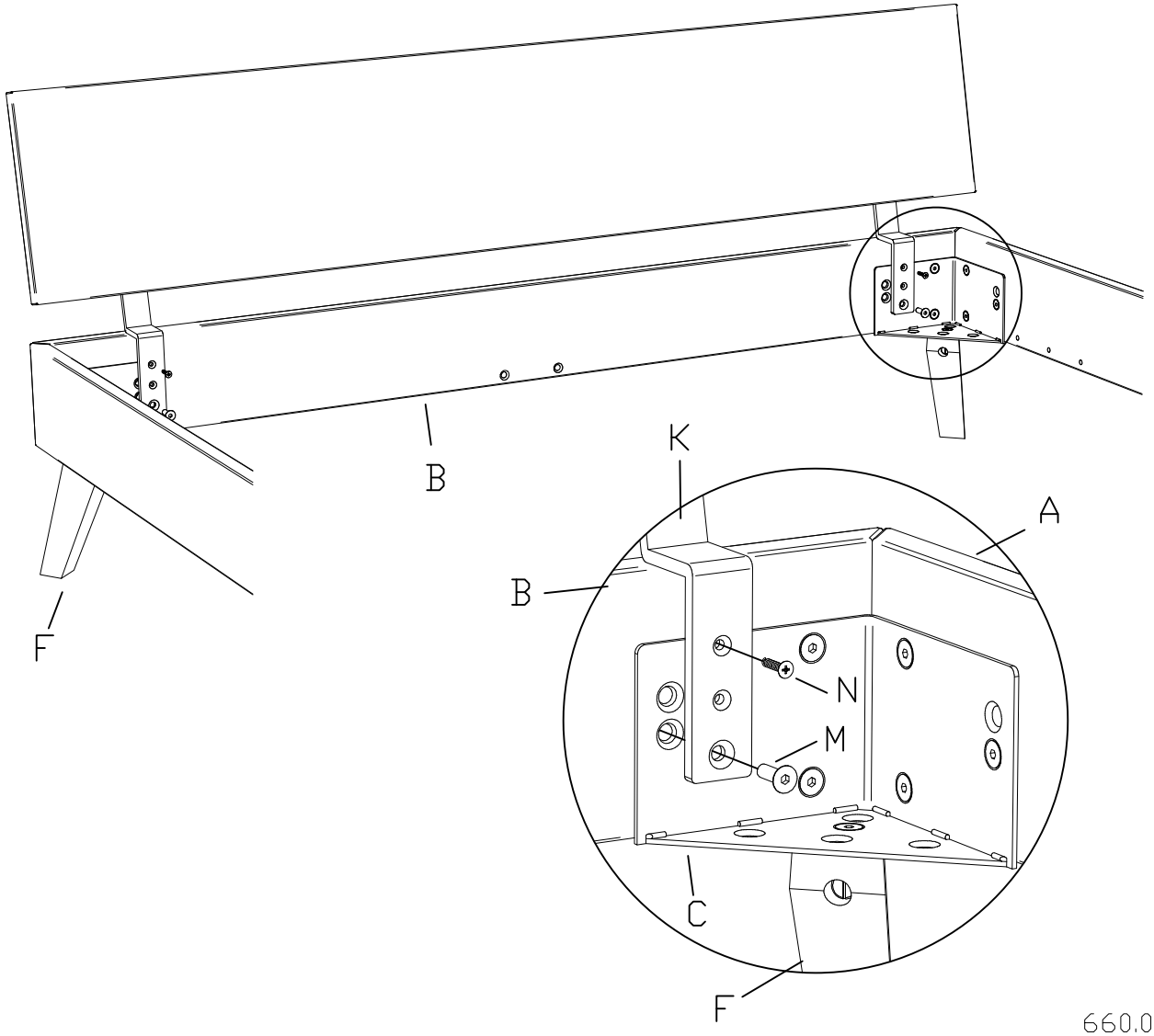

660.01133

bei Breiten ab 160cm
for widths from 160cm
à partir des dimensions 160cm
della misura 160cm

□ x2 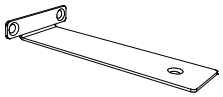 790.023	P x2 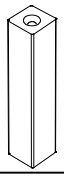	D x6 M8x20 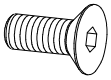 631.87200

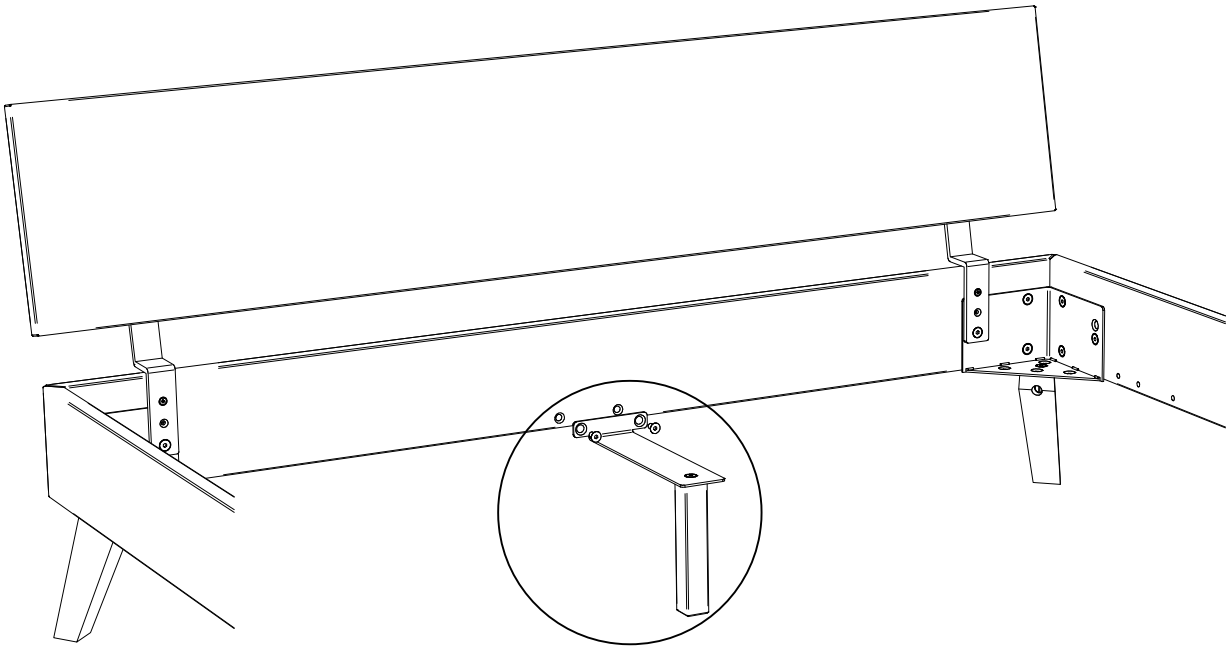

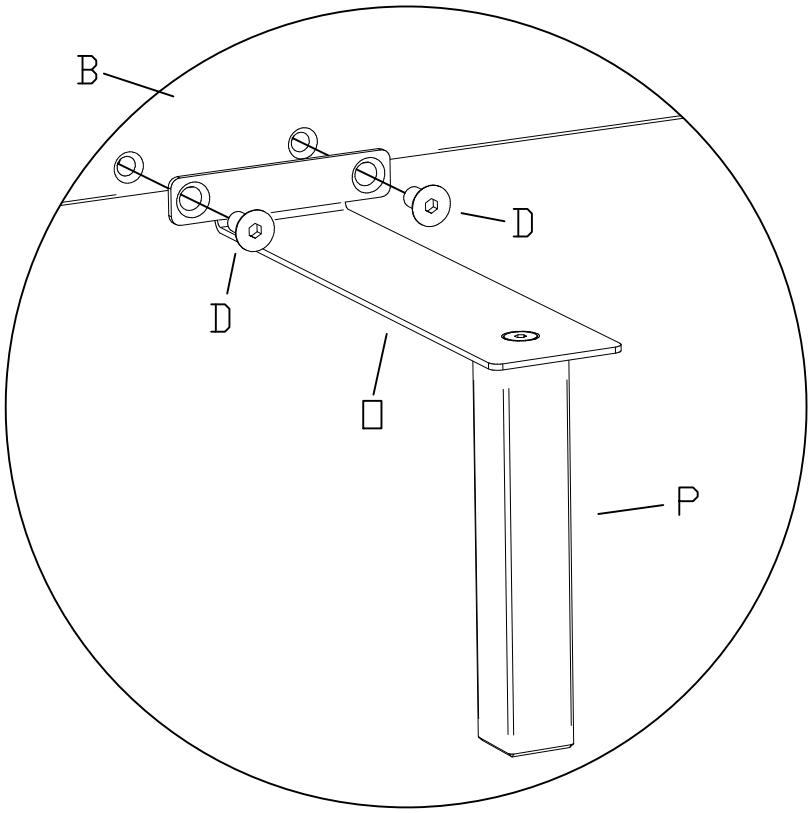

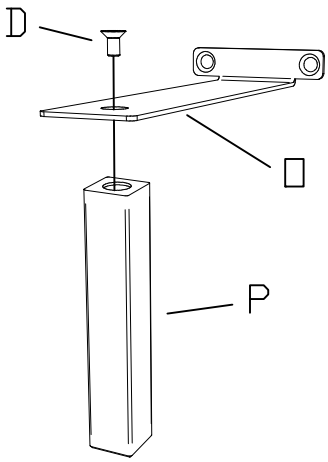

660.01133