Tissiana

ED02

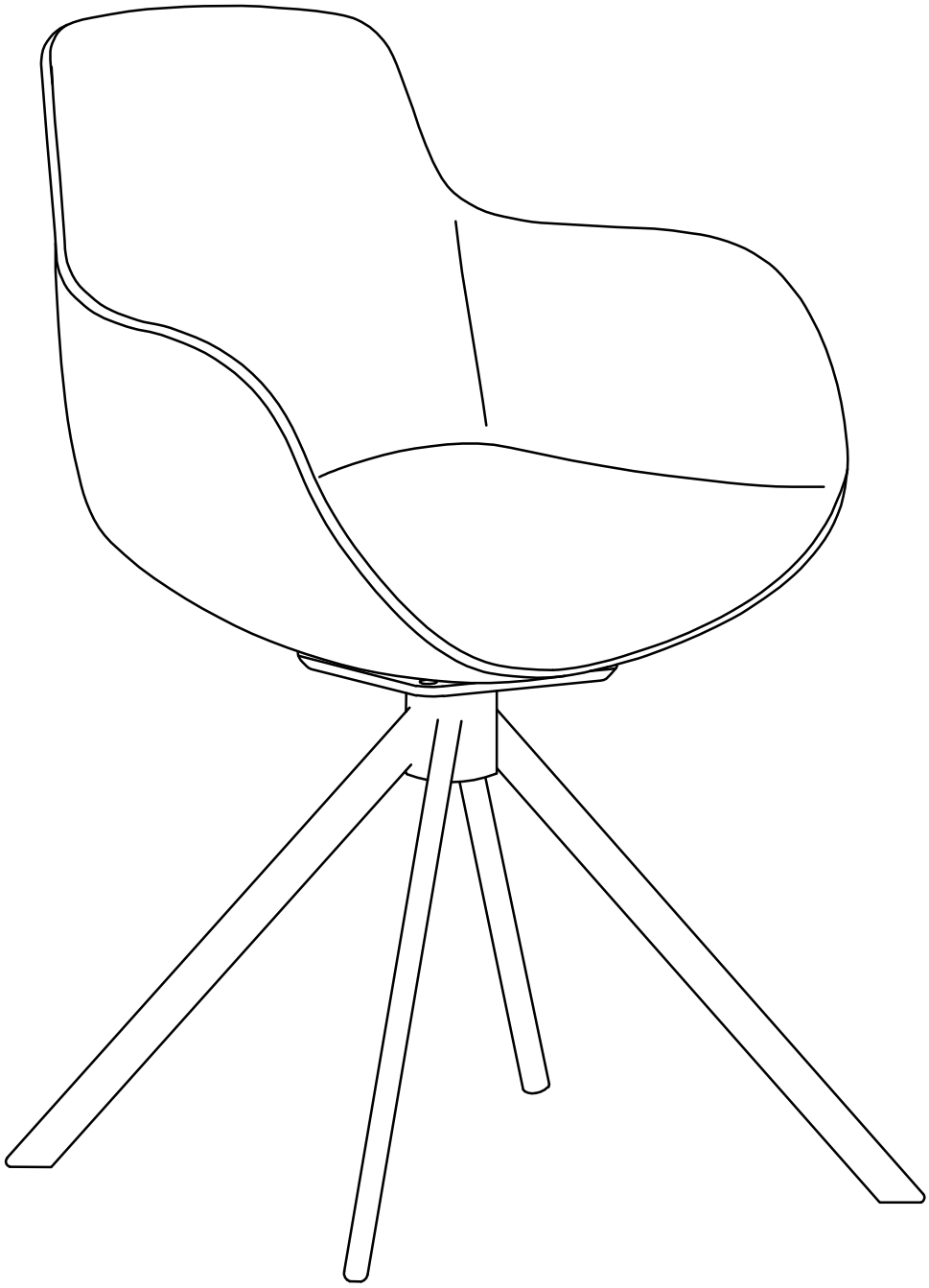

RECYCLED PAPER

KaveHome.com

JULIÀ GRUP Furniture Solutions S.L. B- 17616277
Pol. Ind. Bosc d'en Cuca. C / Tallers, 14. 17410 Sils SPAIN / contact@kavehome.com

10 min

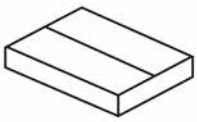

x1

x1

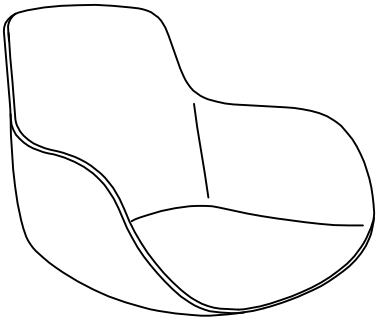

A x1

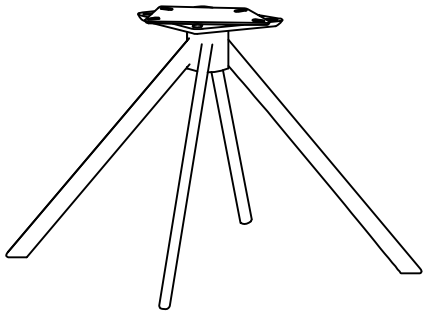

B x1

C x1
5mm

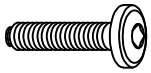

D x4
M8x16mm

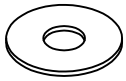

E x4

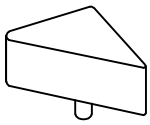

F x1

1

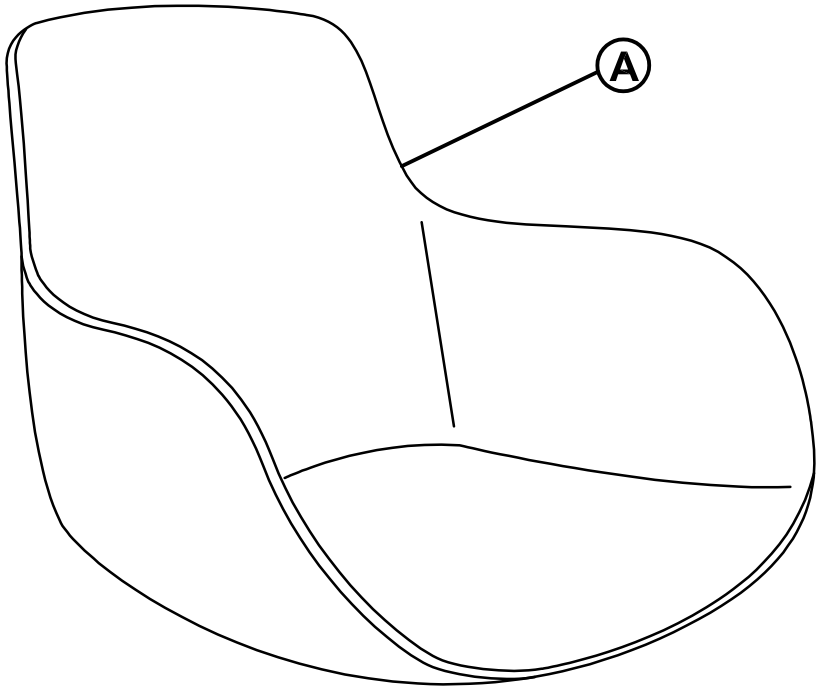

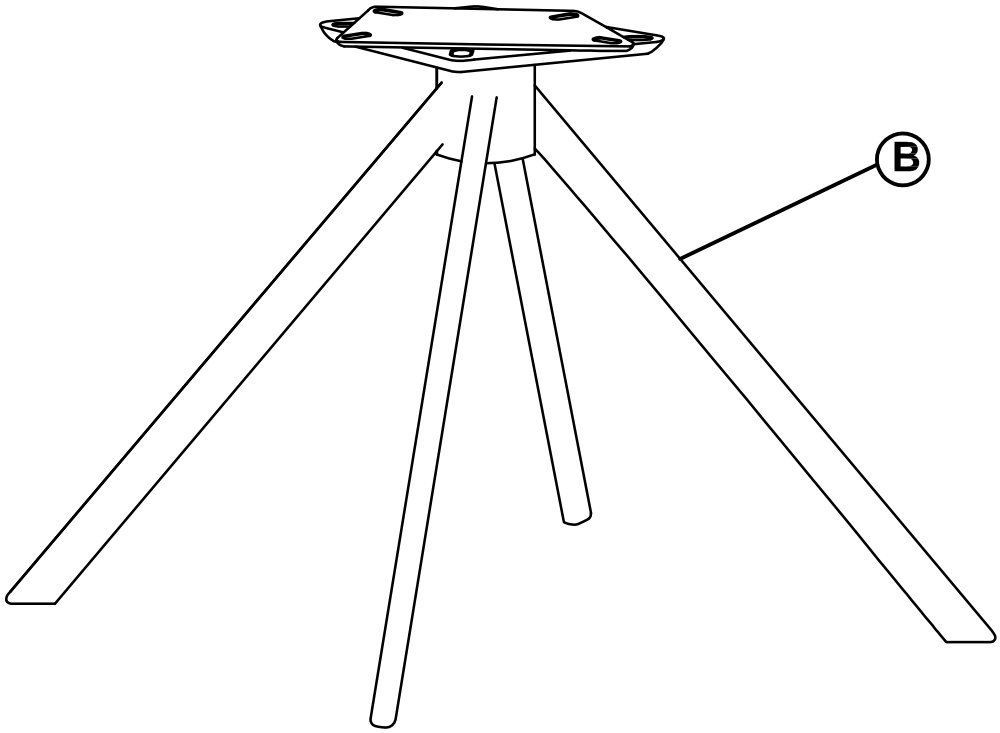

JULIÀ GRUP Furniture Solutions S.L. B- 17616277
Pol. Ind. Bosc d'en Cuca. C / Tallers, 14. 17410 Sils SPAIN / contact@kavehome.com

②

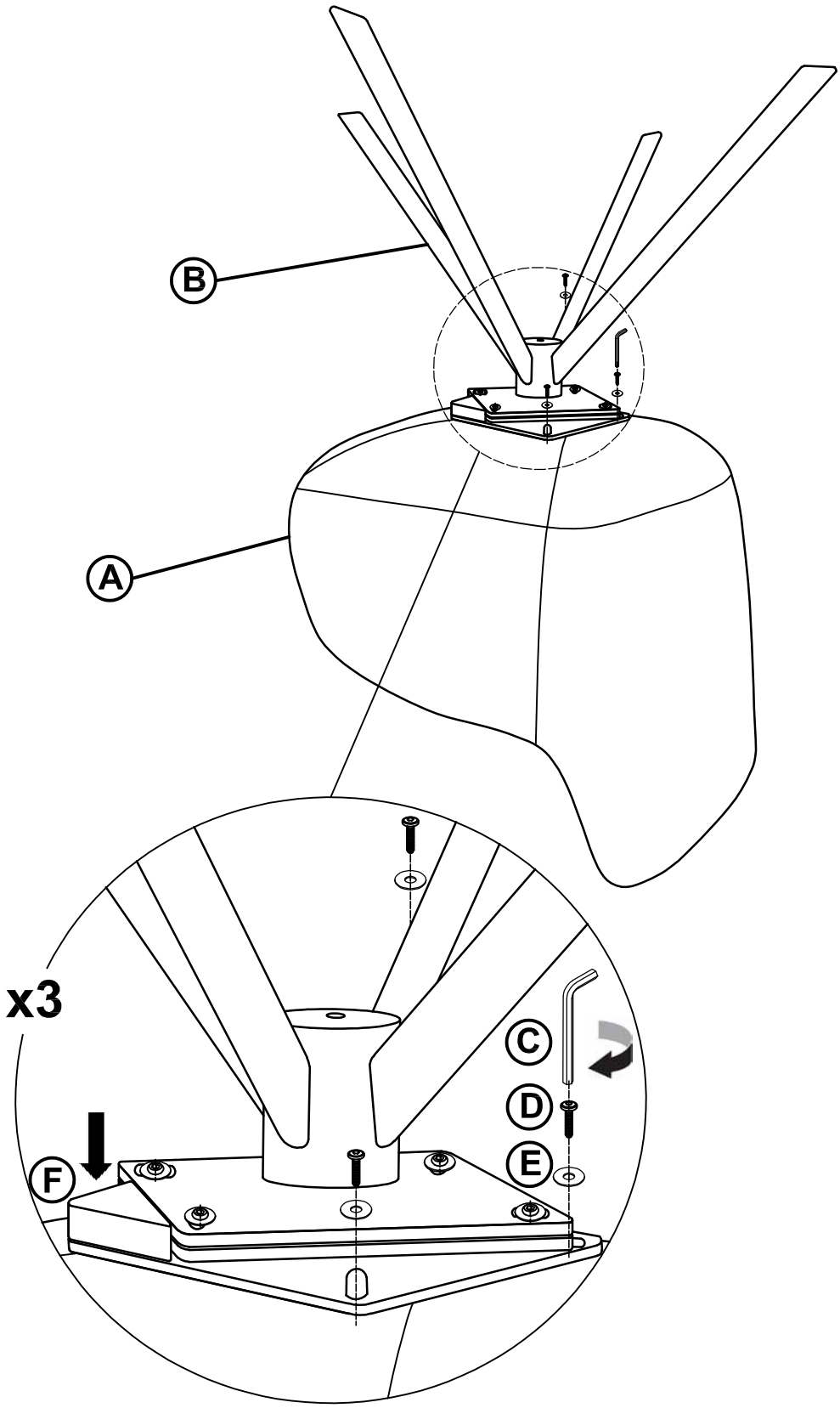

③

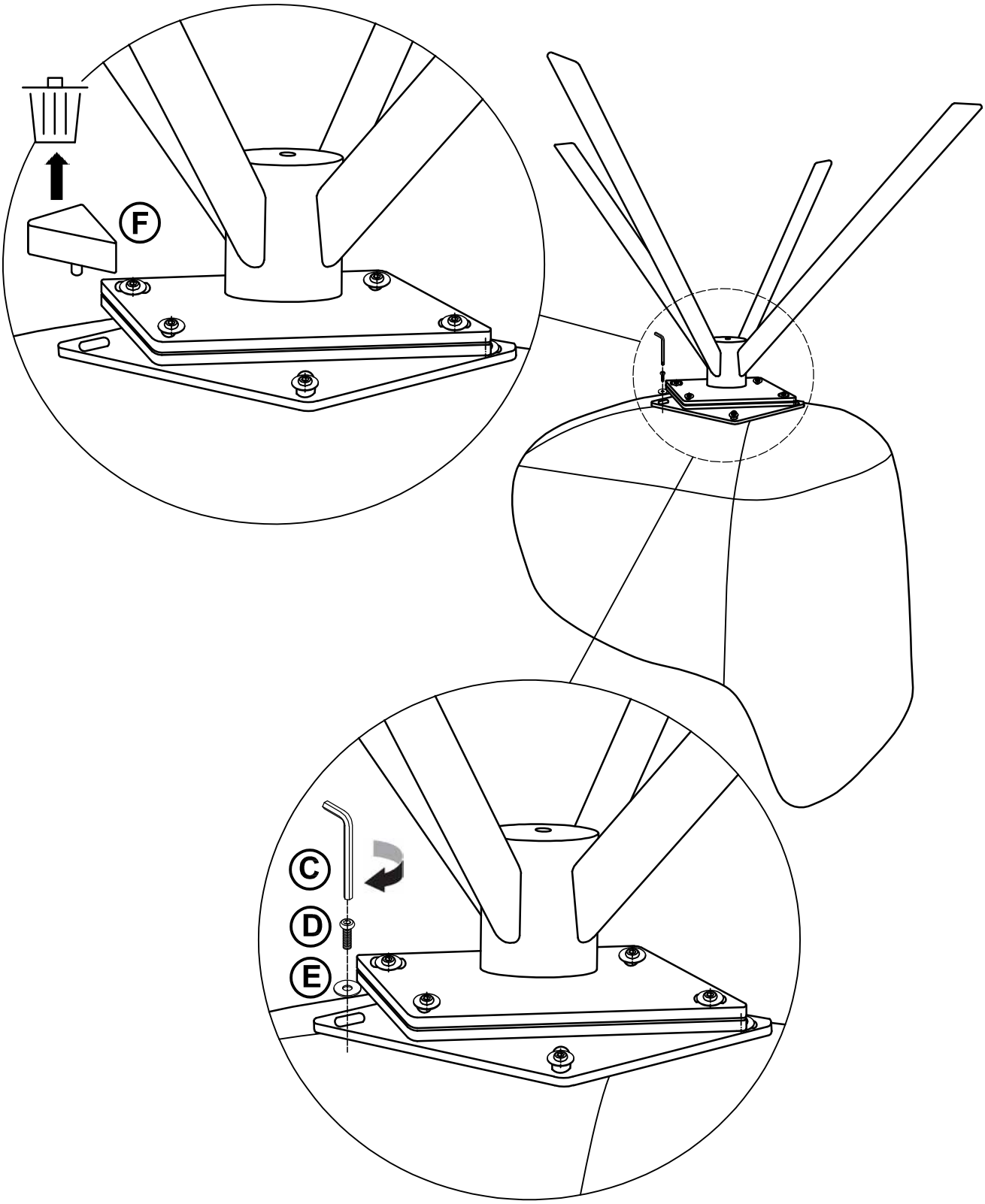

JULIÀ GRUP Furniture Solutions S.L. B- 17616277
Pol. Ind. Bosc d'en Cuca. C / Tallers, 14. 17410 Sils SPAIN / contact@kavehome.com

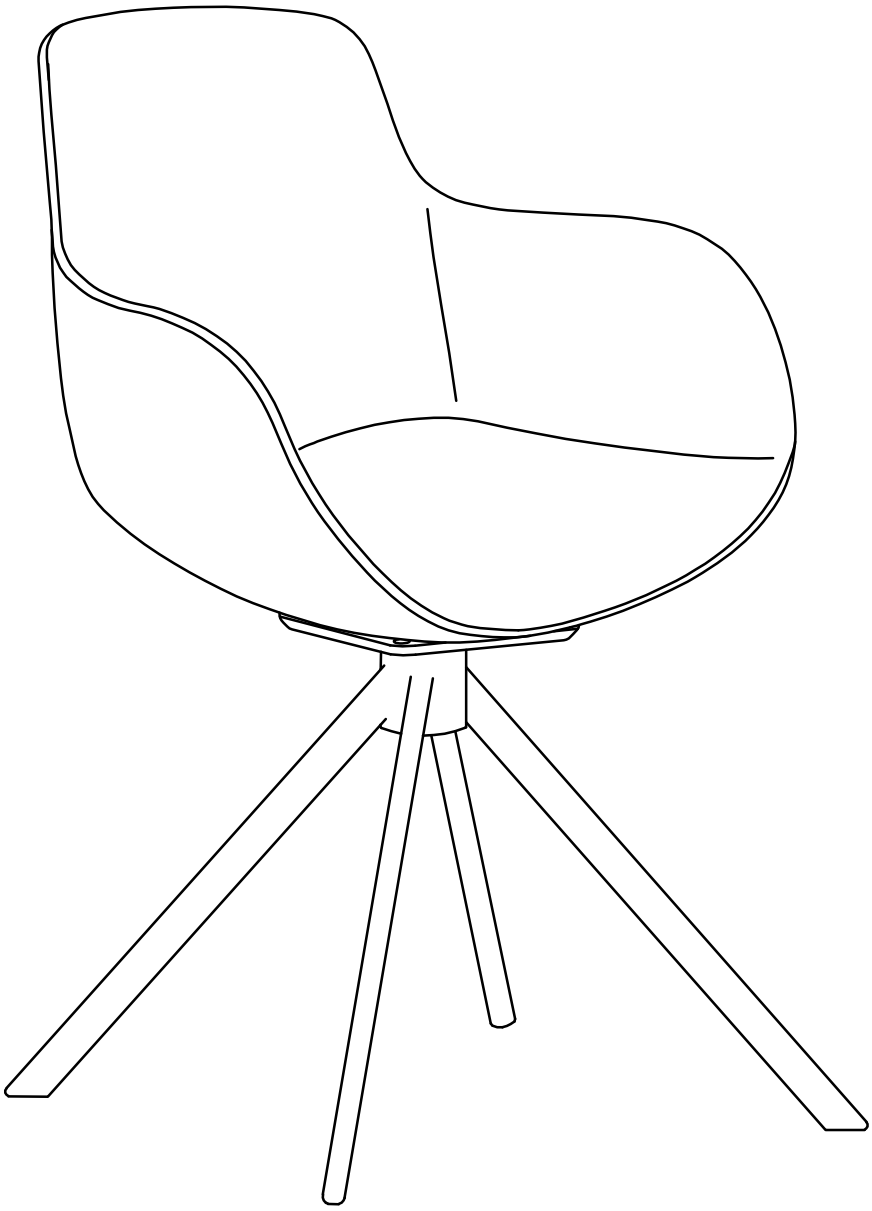

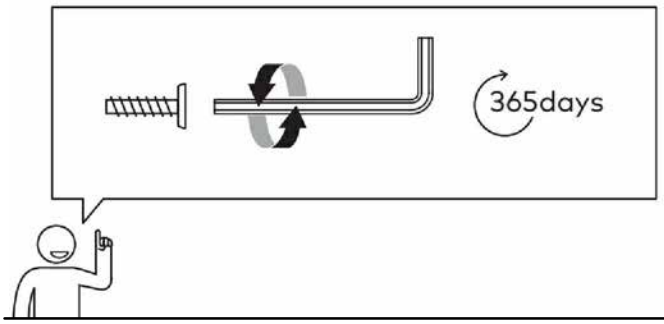
365days

KG
Max 130Kg

Kave Home

THAT'S ALL FOLKS

Share your style!

#KaveHome

JULIÀ GRUP Furniture Solutions S.L. B- 17616277
Pol. Ind. Bosc d'en Cuca. C / Tallers, 14. 17410 Sils SPAIN / contact@kavehome.com