5x 1/5 2/5 3/5 4/5 5/5

Misano
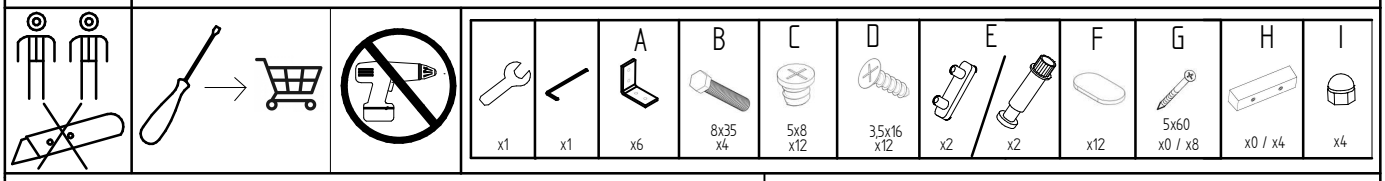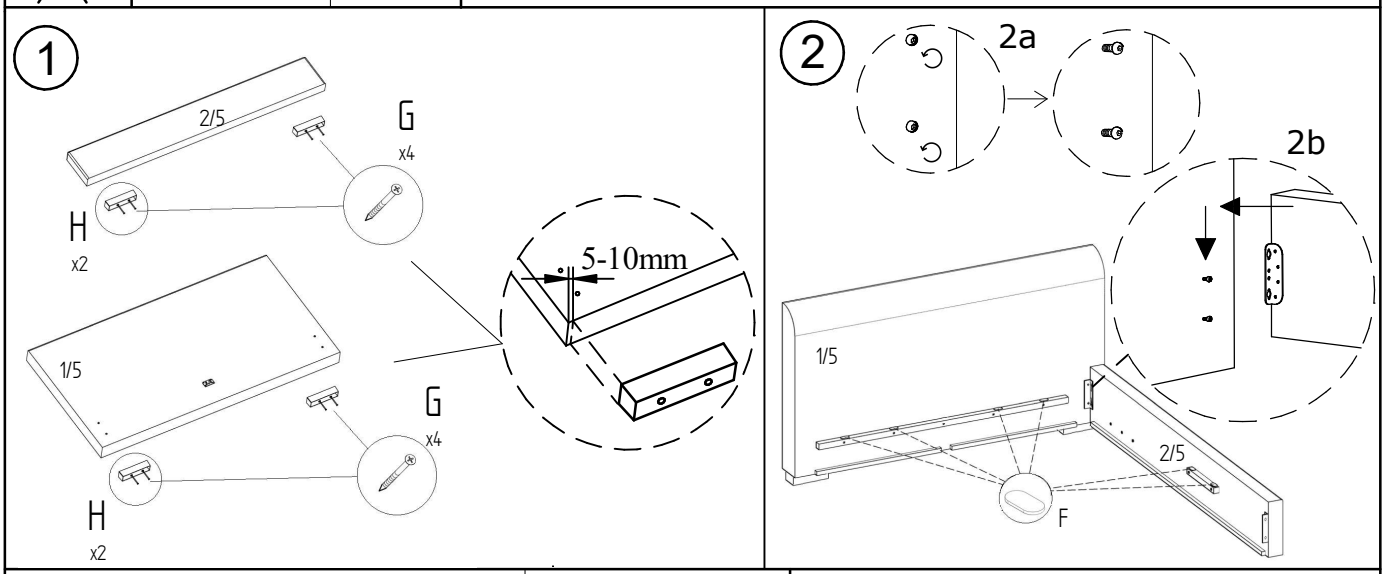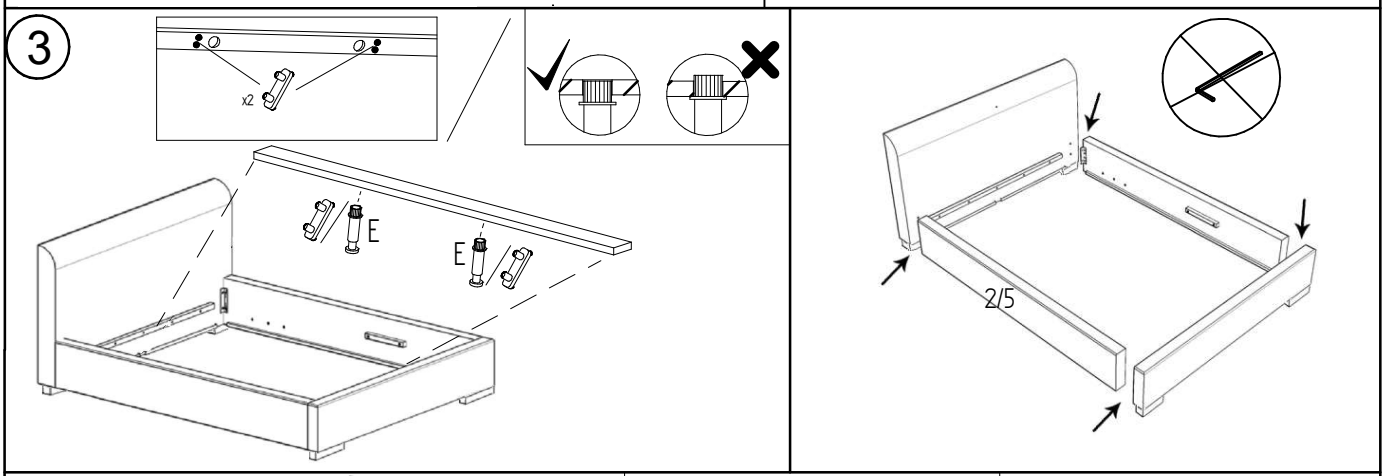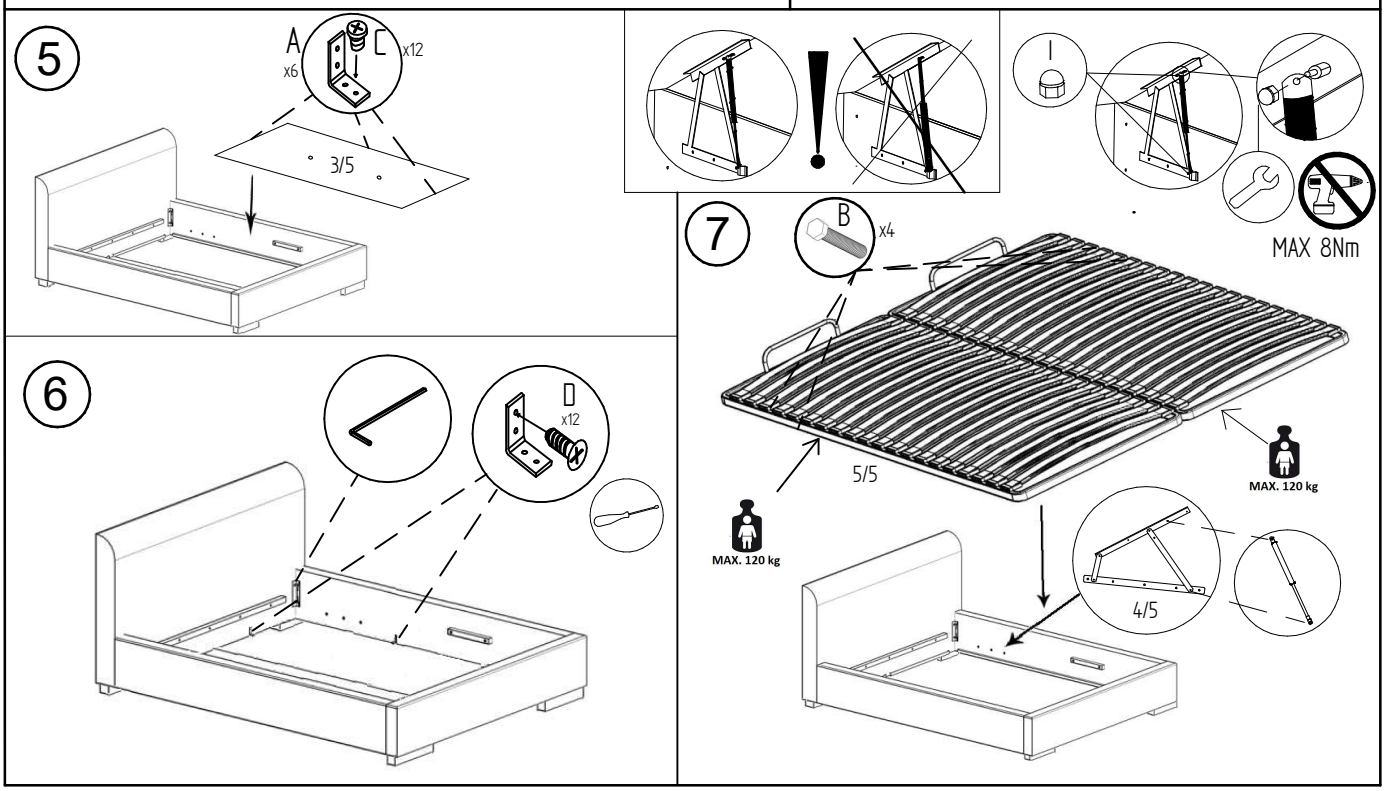
5192